THIS MAP IS FOR THE PURPOSE OF AD VALOREM TAXATION ONLY.

Parcel Map No. 18775, P.M. 240/4-5

Adelanto Out
Tax Rate Area
51008

3131 - 51

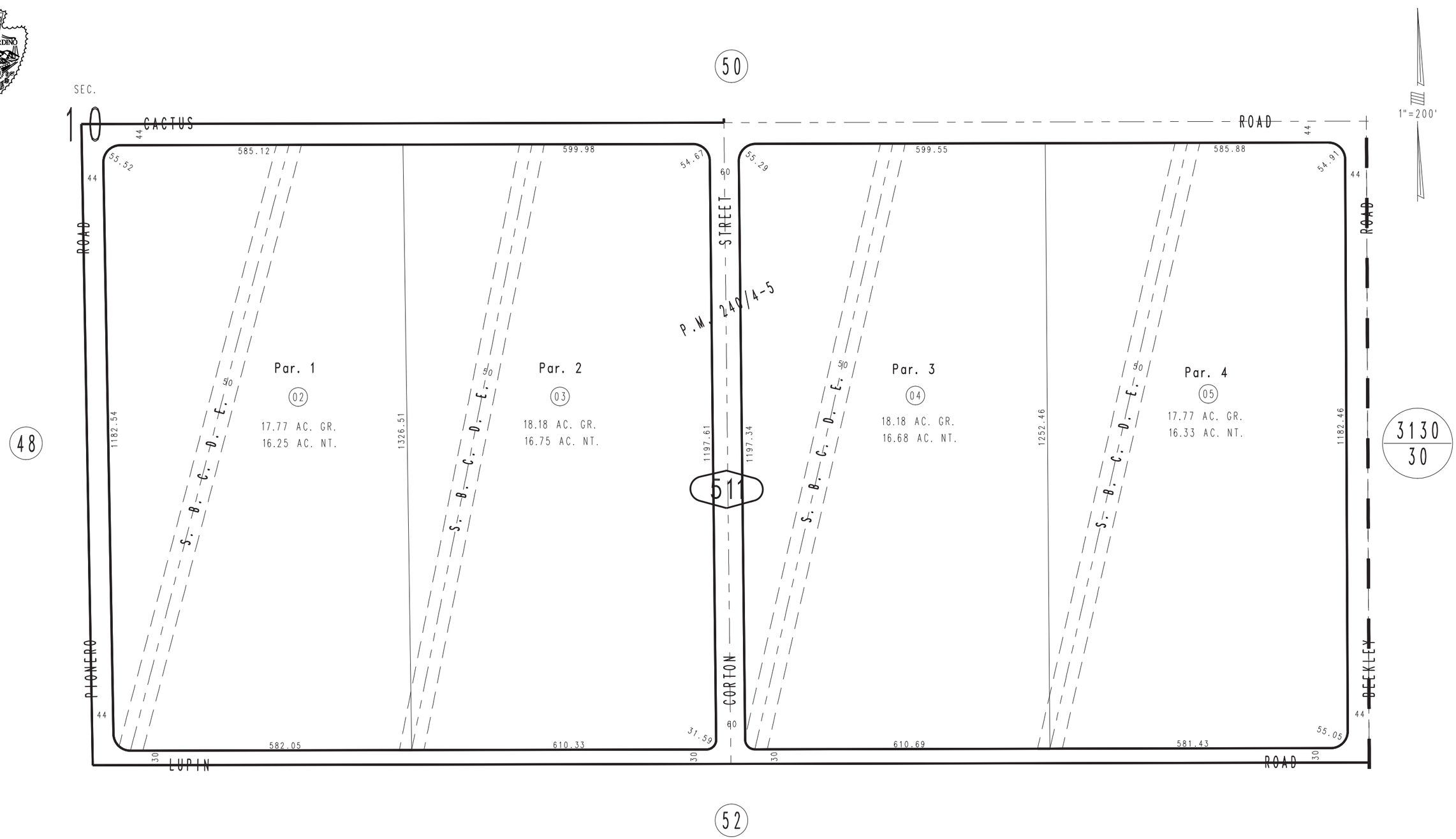

REVISED
06/21/12 RU

APRIL 1987

Ptn. S.E.1/4, Sec. 10
T.5N., R.7W.

Assessor's Map
Book 3131 Page 51
San Bernardino County