THIS MAP IS FOR THE PURPOSE OF AD VALOREM TAXATION ONLY.

N.1/2, S.E.1/4 Fractional Sec. 5, T.5N., R.6W., S.B.M.

Adelanto Out
Tax Rate Area
51010

3130 - 28

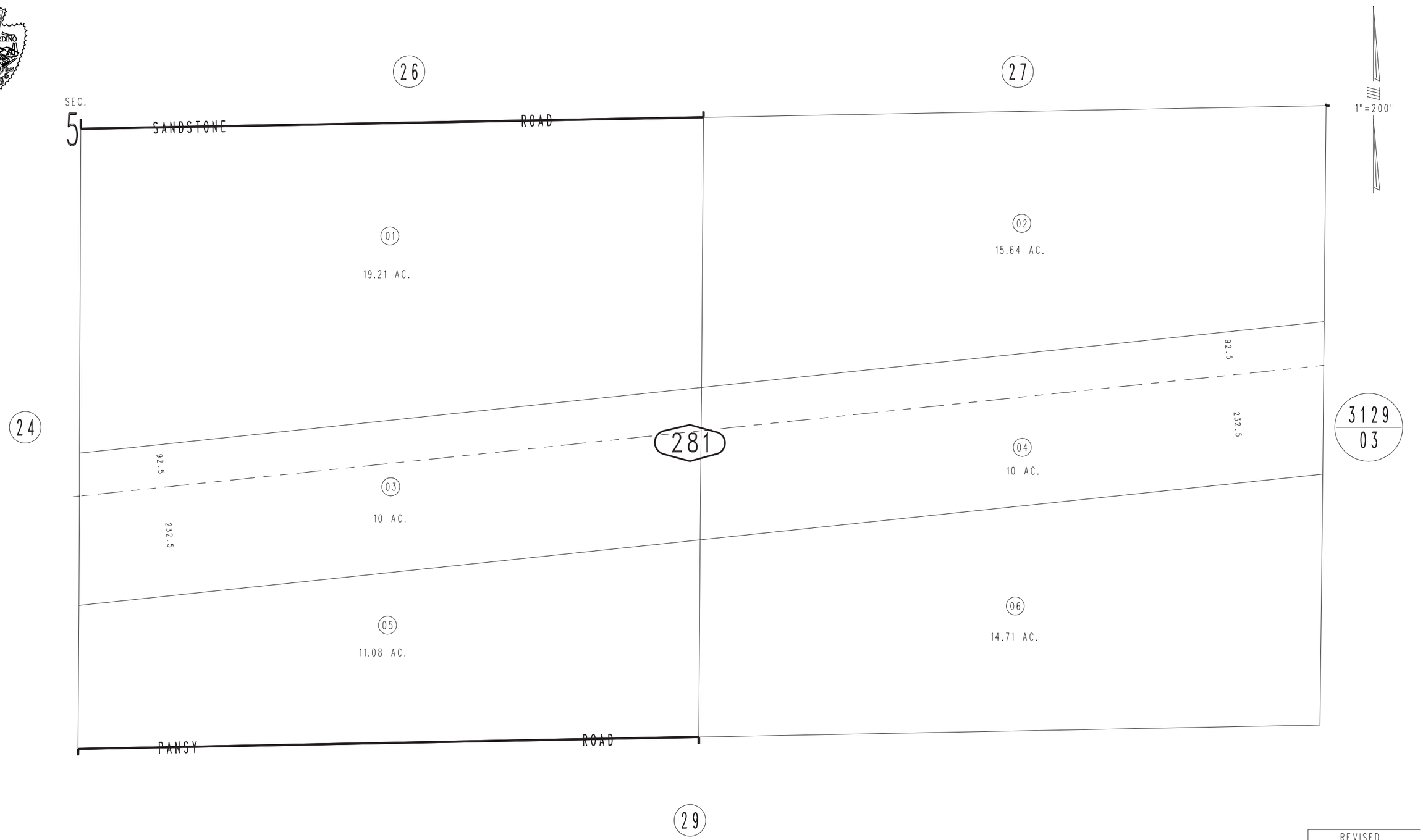

REVISED
04/15/09 LH

Dec. 1986

Assessor's Map
Book 3130 Page 28
San Bernardino County