THIS MAP IS FOR THE PURPOSE OF AD VALOREM TAXATION ONLY.

N.1/2, N.W.1/4, Sec. 10, T.4N., R.7W., S.B.M.

Snowline Joint Unif.
Tax Rate Area
101014

3068 - 56

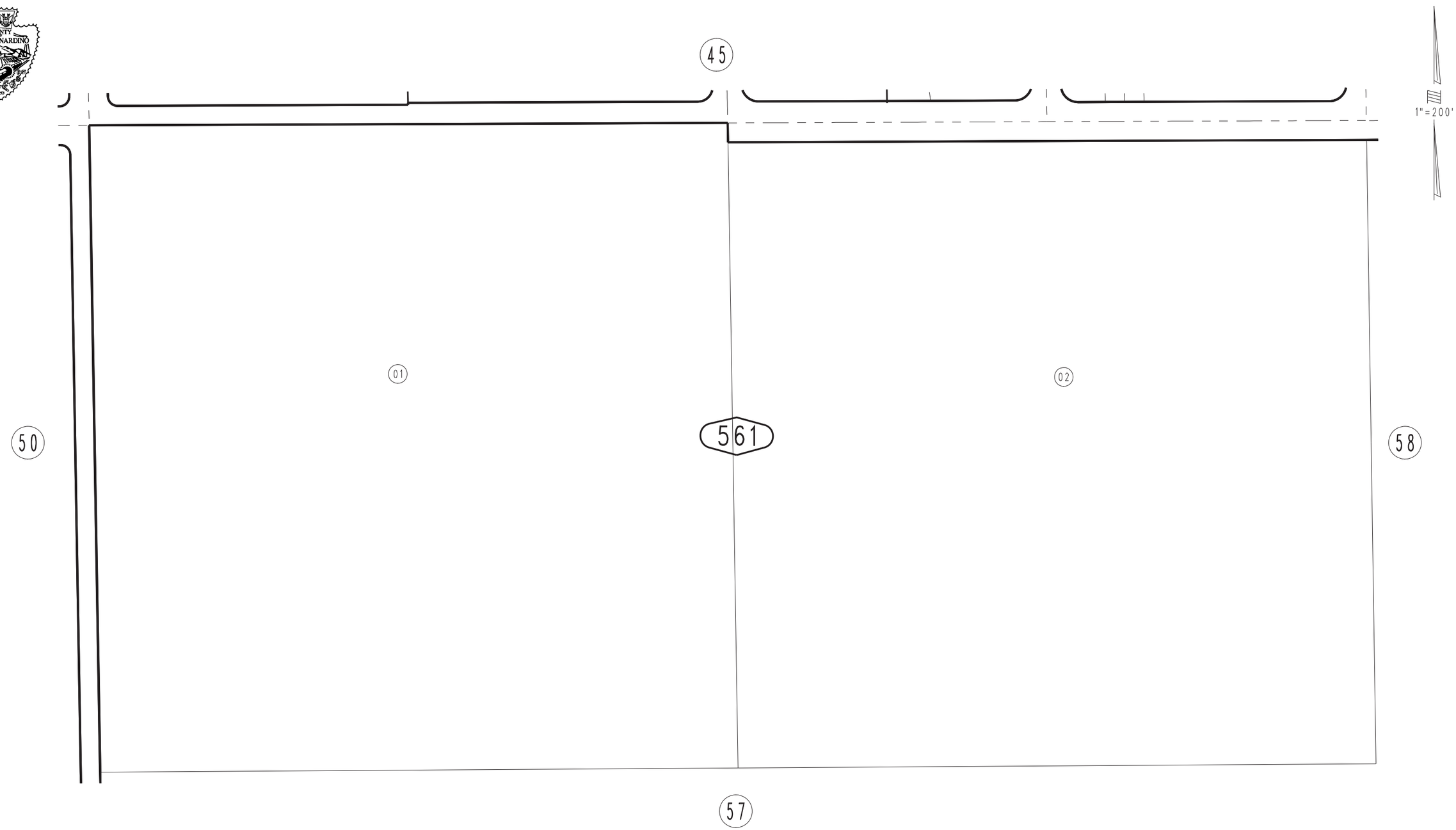

REVISED
03/04/10 LH

Assessor's Map
Book 3068 Page 56
San Bernardino County

June1994