THIS MAP IS FOR THE PURPOSE OF AD VALOREM TAXATION ONLY.

S.1/2, N.E.1/4, Fract'l. Sec. 7, T.4N., R.7W., S.B.M.

Snowline Joint Unif.
Tax Rate Area
101014

3068 - 19

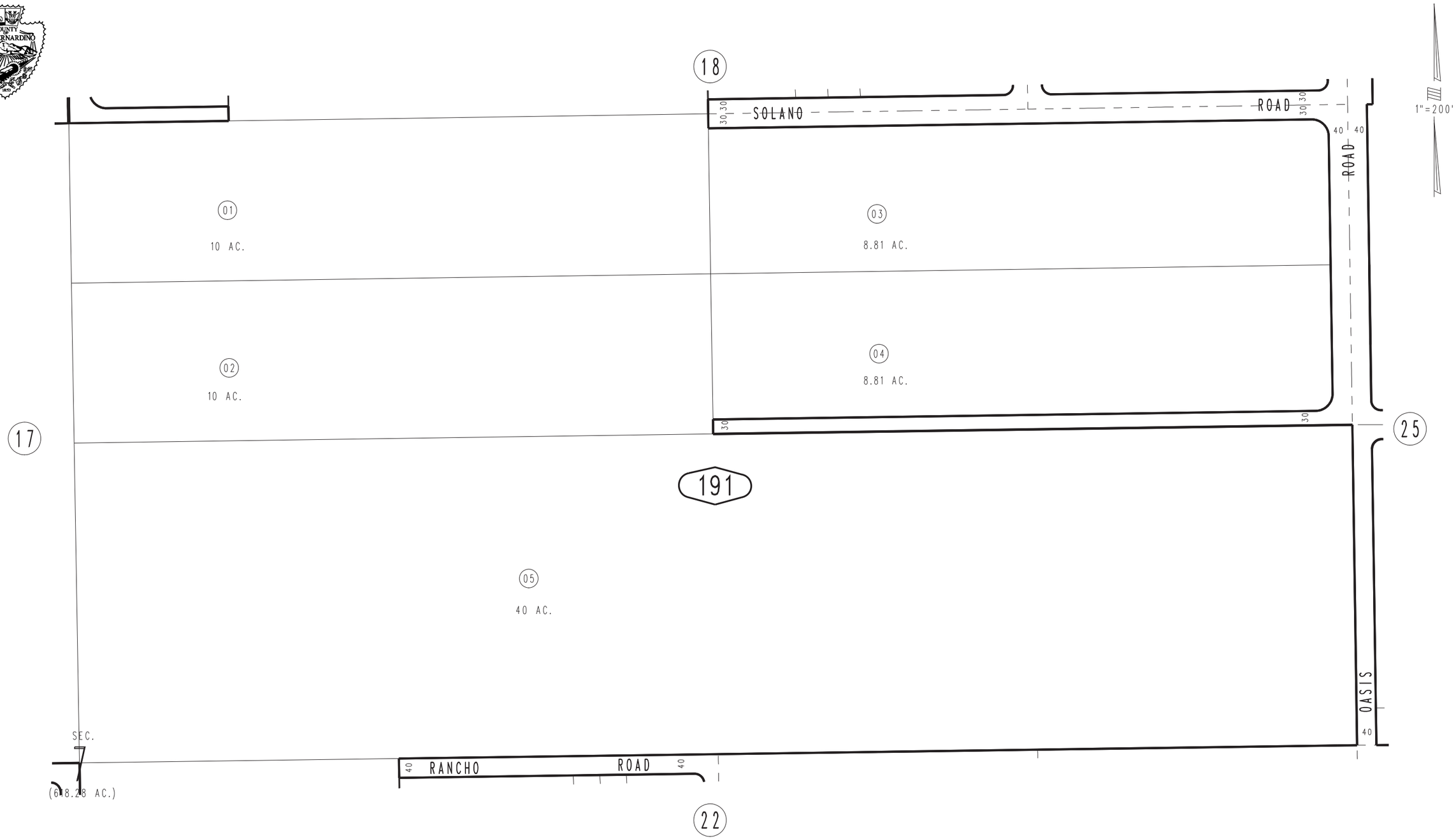

REVISED
03/04/10 LH

Assessor's Map
Book 3068 Page 19
San Bernardino County

June1994