THIS MAP IS FOR THE PURPOSE OF AD VALOREM TAXATION ONLY.

COUNTY SAN BERNARDINO

Ptn. Tract No. 11792, M.B. 160/1-8, Amended-163/69-76

City of Ontario
Tax Rate Area
4029,4081

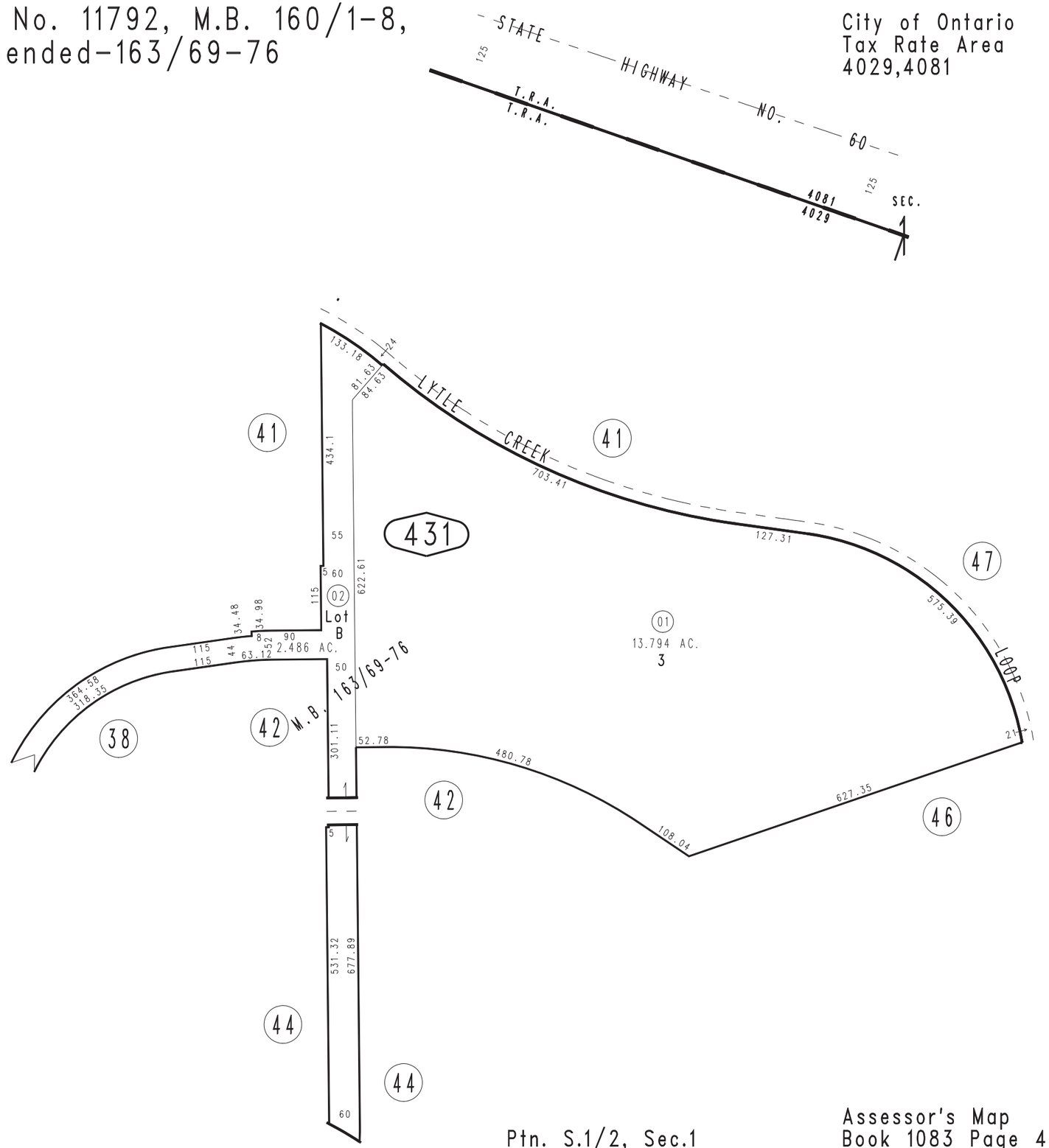

REVISED
06/03/10 LH-MC

JULY 2008 LH

Ptn. S.1/2, Sec.1
T.2S.,R.7W.

Assessor's Map
Book 1083 Page 43
San Bernardino County