THIS MAP IS FOR THE PURPOSE OF AD VALOREM TAXATION ONLY.

Ptn. Sec. 36, T.1N., R.7W., S.B.M.

0201 / 27

City of Rancho Cucamonga
Tax Rate Area
15048

1076 - 37

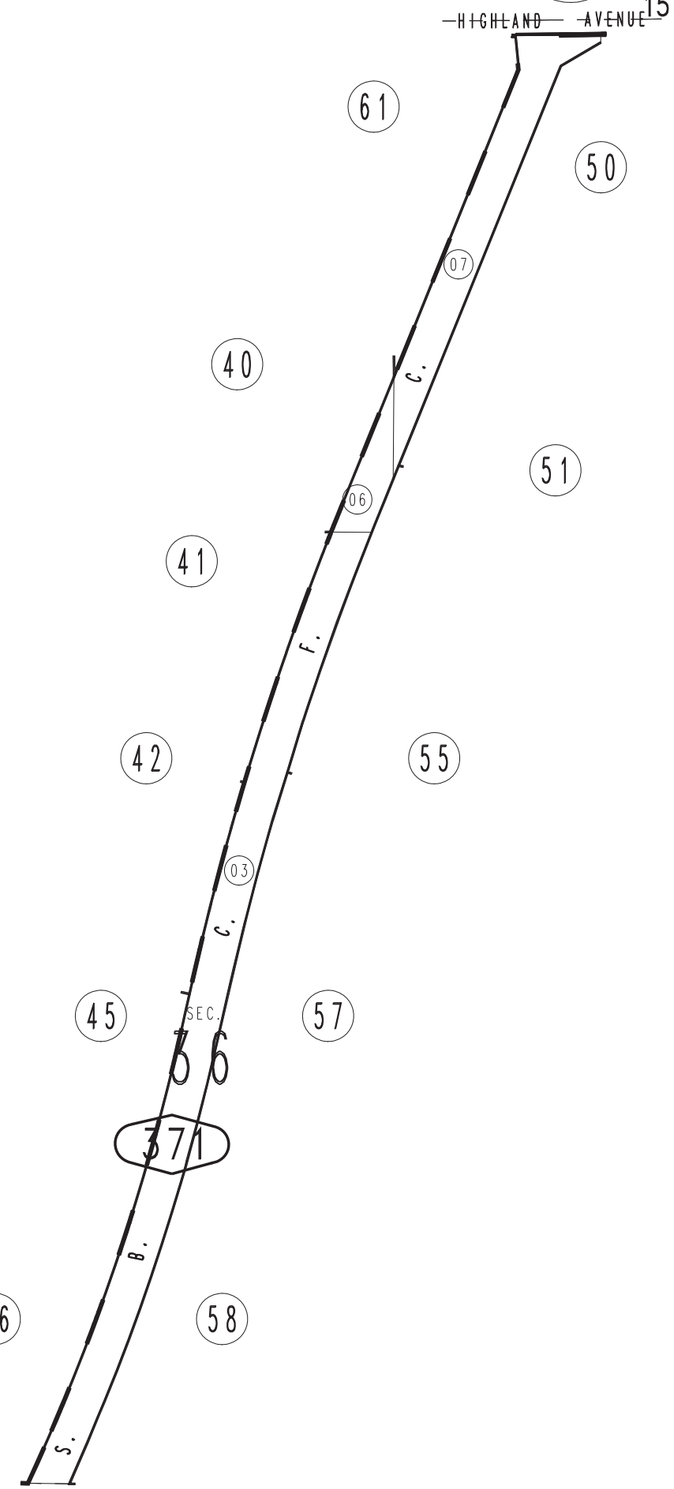

1" = 400'

DEC 1988

Assessor's Map
Book 1076 Page 37
San Bernardino County

REVISED
02/23/10 LH
06/09/10 LH-MC