THIS MAP IS FOR THE PURPOSE OF AD VALOREM TAXATION ONLY.

Ptn. Rancho Santa Ana Del Chino, M.B. 6/15

City of Chino
Tax Rate Area
1160

1056 - 22

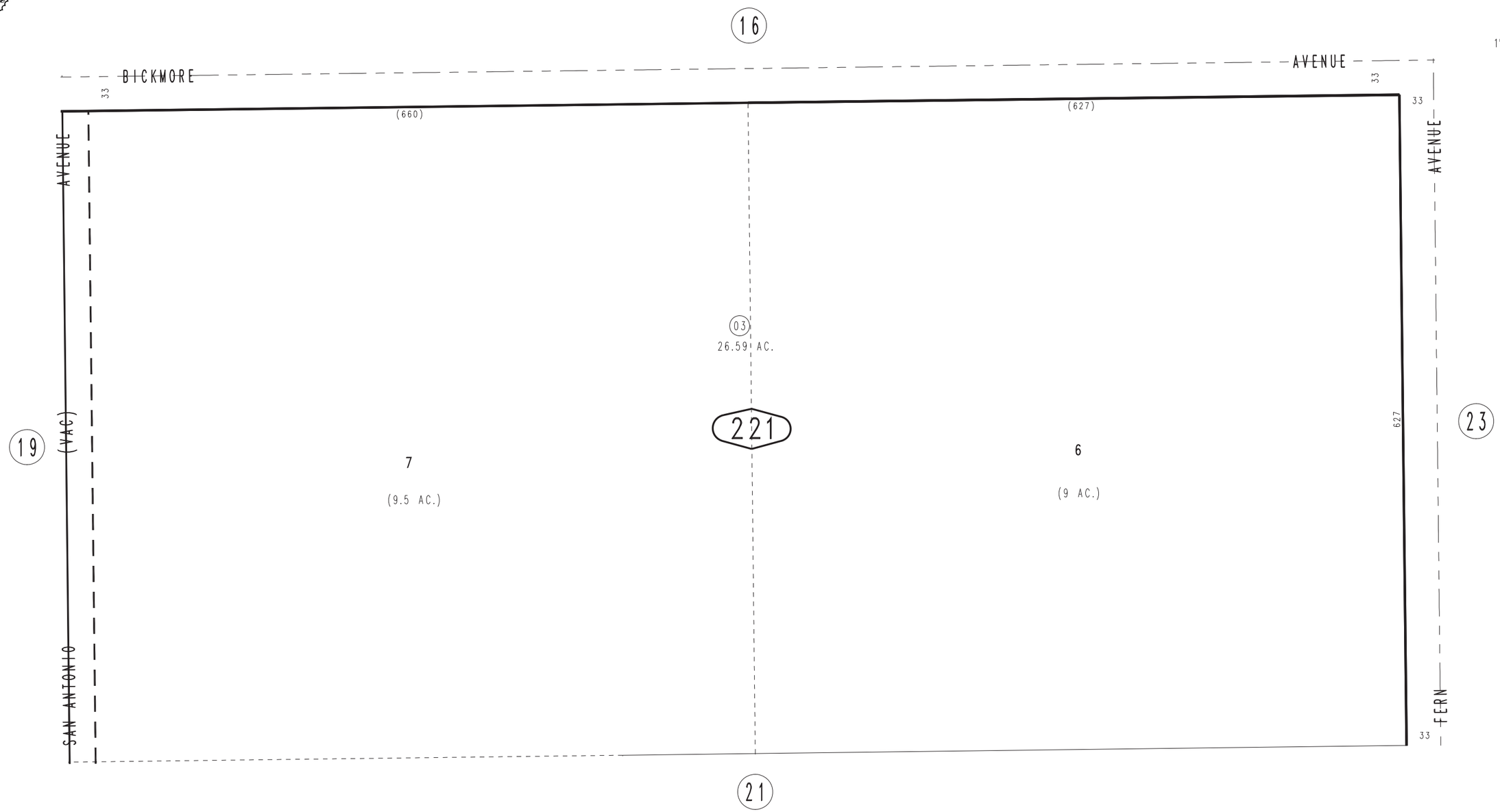

REVISED
05/04/06 VK

November 2004

Ptn. N.W.1/4, Sec.31
T.2S.,R.7W., S.B.B.&M.

Assessor's Map
Book 1056 Page 22
San Bernardino County