THIS MAP IS FOR THE PURPOSE OF AD VALOREM TAXATION ONLY.

Ptn. Rancho Santa Ana Del Chino, M.B. 6/15

City of Chino
Tax Rate Area
1154,1162

1055 - 18

1" = 100'

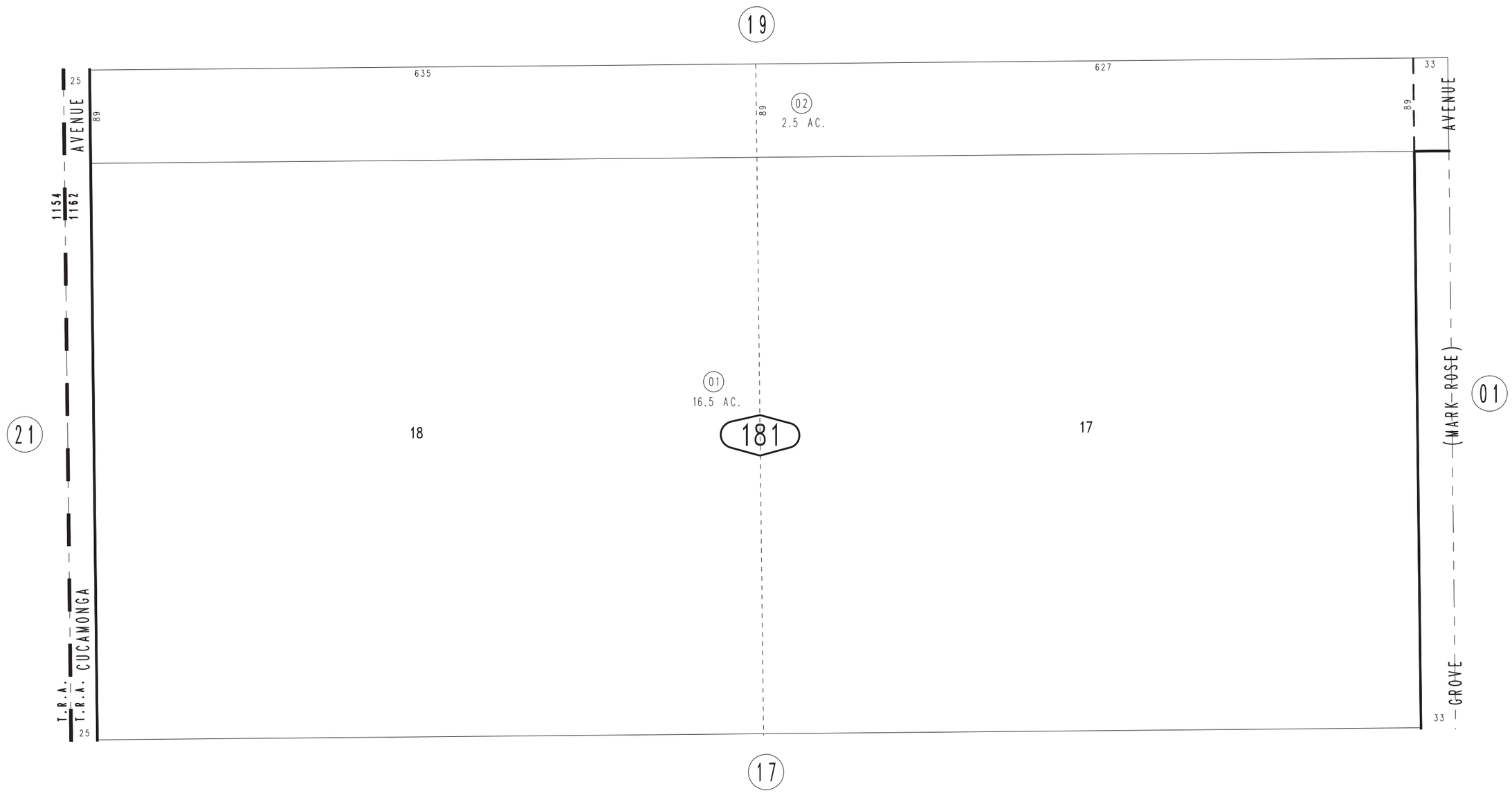

REVISED
08/06/09 GW

November 2004

Ptn. N.E.1/4, Sec.29
T.2S.,R.7W.

Assessor's Map
Book 1055 Page 18
San Bernardino County