THIS MAP IS FOR THE PURPOSE OF AD VALOREM TAXATION ONLY.

Ptn. Rancho Santa Ana Del Chino, M.B. 6/15

City of Ontario
Tax Rate Area
4073

1053 - 33

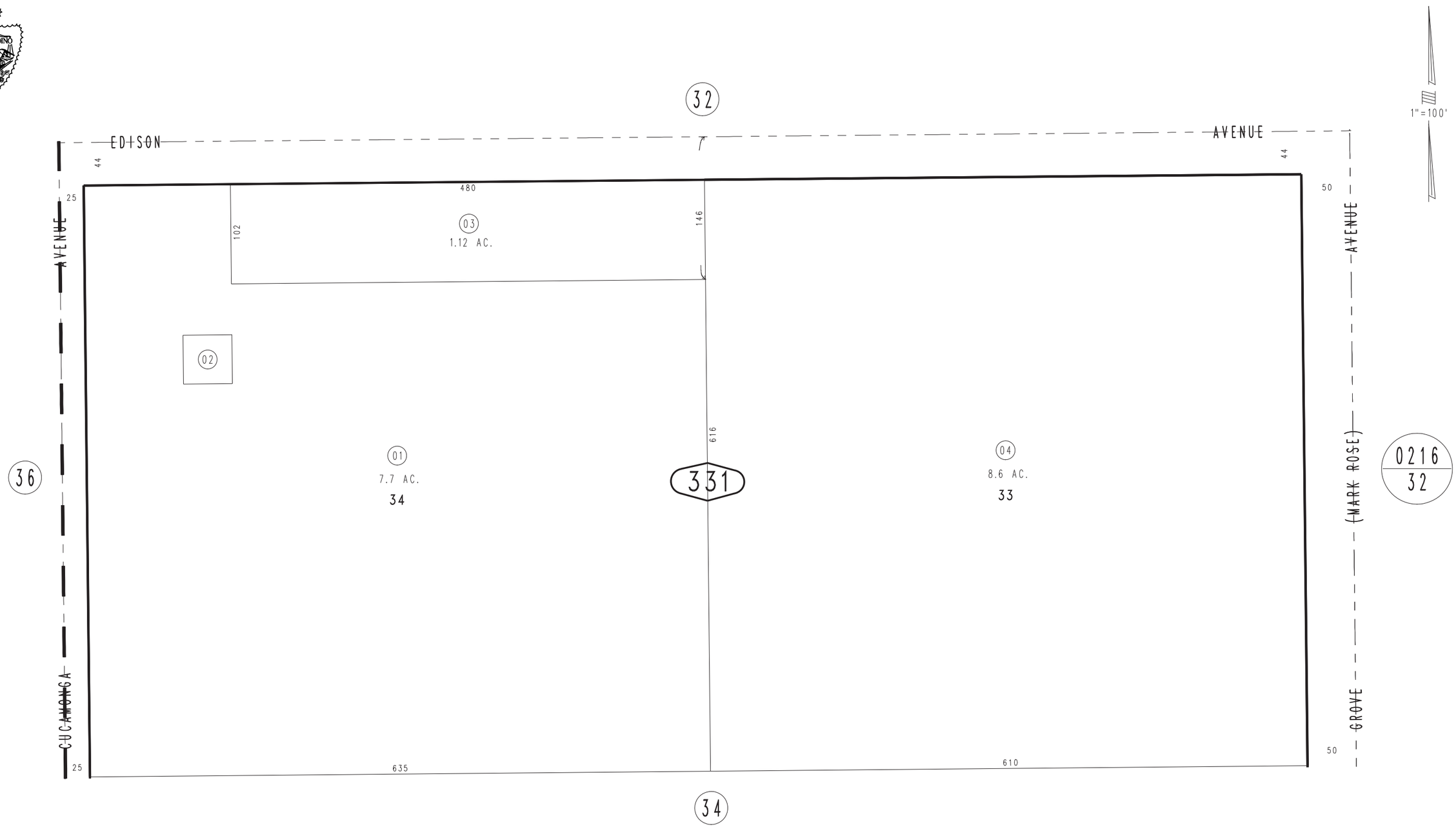

REVISED

November 2004

Ptn. S.E.1/4, Sec.17
T.2S., R.7W.

Assessor's Map
Book 1053 Page 33
San Bernardino County