THIS MAP IS FOR THE PURPOSE OF AD VALOREM TAXATION ONLY.

Ptn. Rancho Santa Ana Del Chino, M.B. 6/15

City of Ontario
Tax Rate Area
4074

1053 - 20

1" = 100'

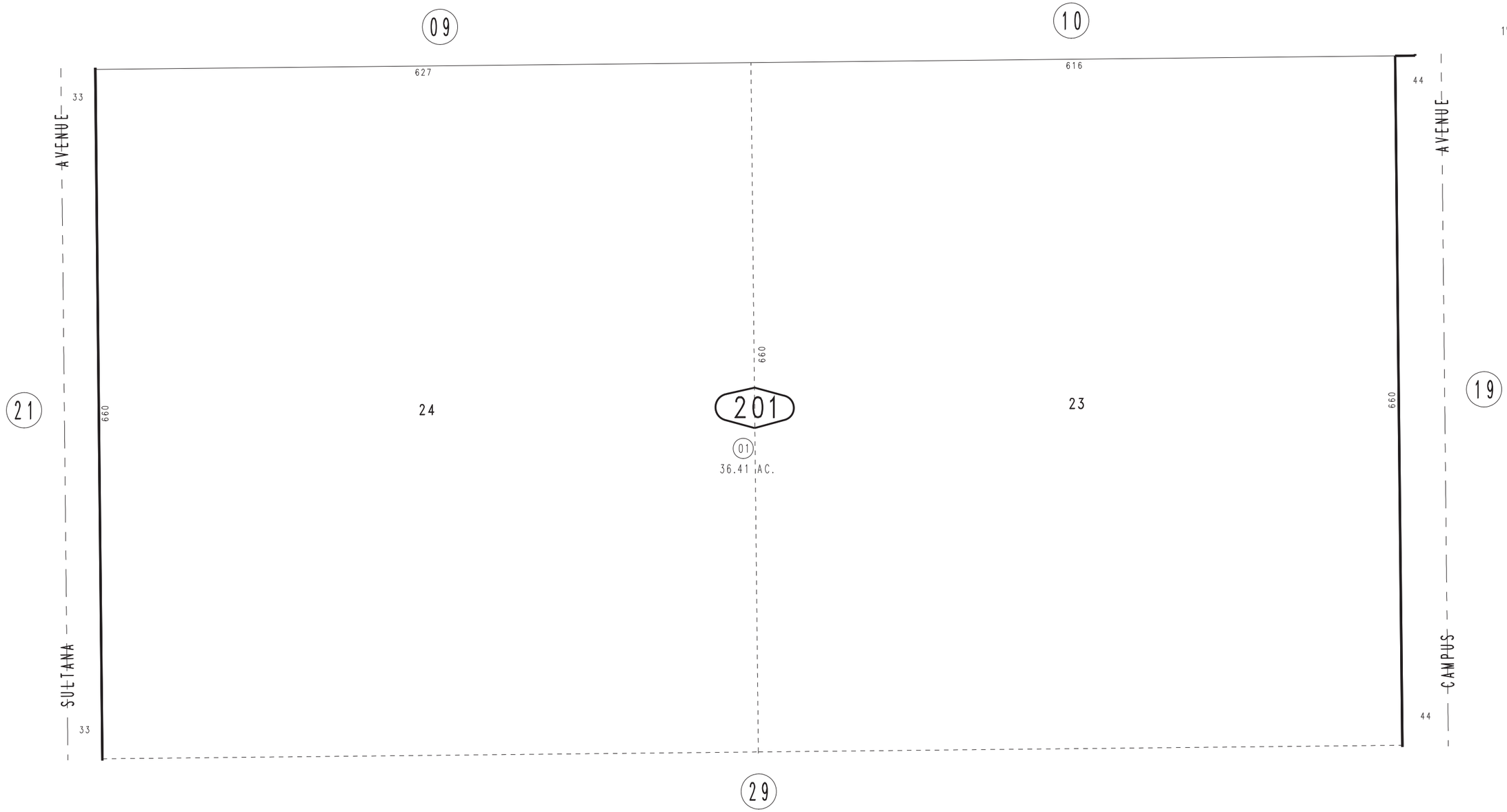

REVISED

November 2004

Ptn. N.W.1/4, Sec.17
T.2S.,R.7W., S.B.B.&M.

Assessor's Map
Book 1053 Page 20
San Bernardino County