THIS MAP IS FOR THE PURPOSE OF AD VALOREM TAXATION ONLY.

Ptn. Rancho Santa Ana Del Chino, M.B. 6/15

City of Ontario
Tax Rate Area
4073

1053 - 16

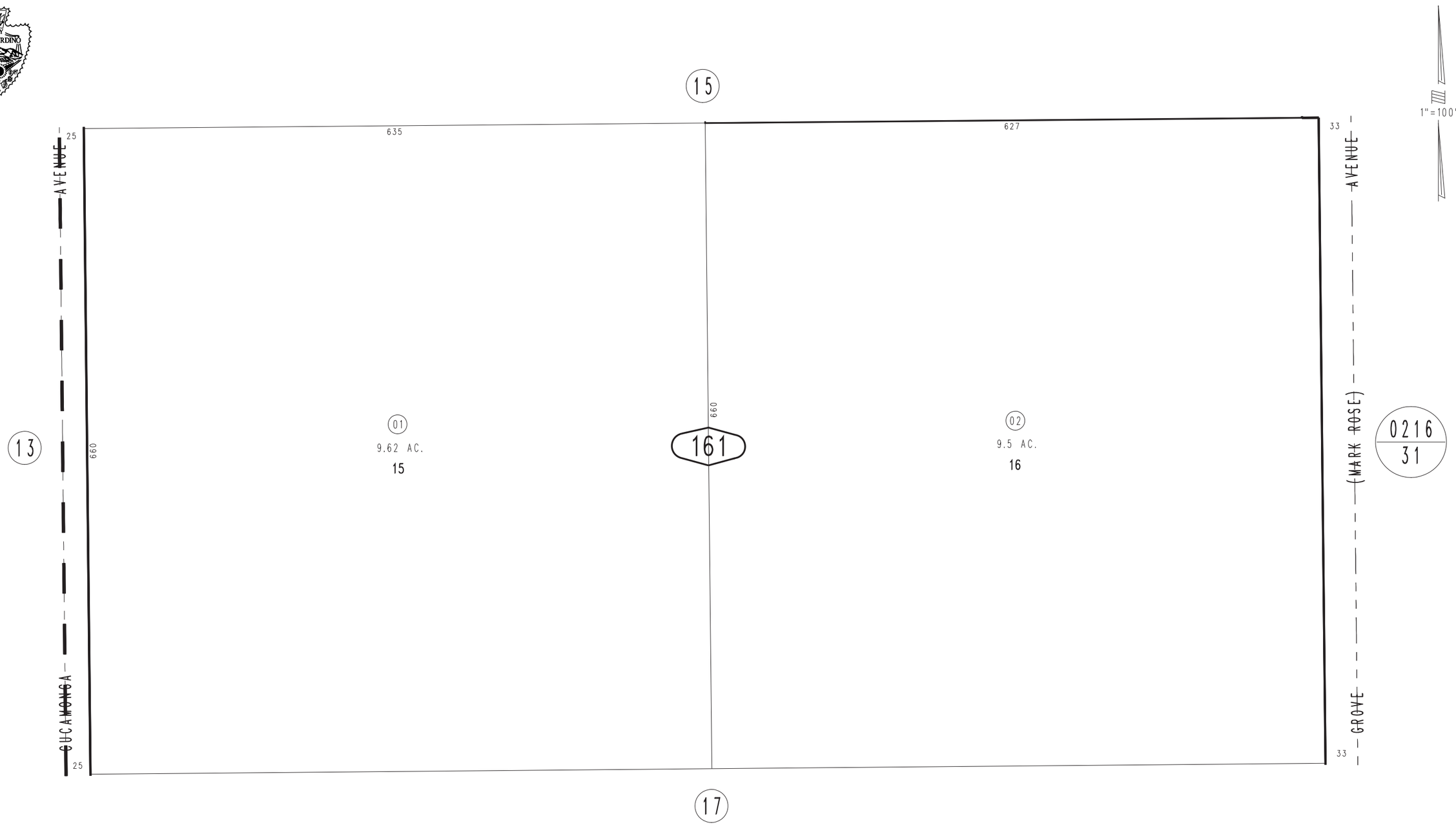

REVISED

November 2004

Ptn. N.E.1/4, Sec.17
T.2S.,R.7W., S.B.B.&M.

Assessor's Map
Book 1053 Page 16
San Bernardino County