THIS MAP IS FOR THE PURPOSE OF AD VALOREM TAXATION ONLY.

Ptn. Rancho Santa Ana Del Chino, M.B. 6/15

Chino Outside
Tax Rate Area
61007

1052 - 52

1" = 100'

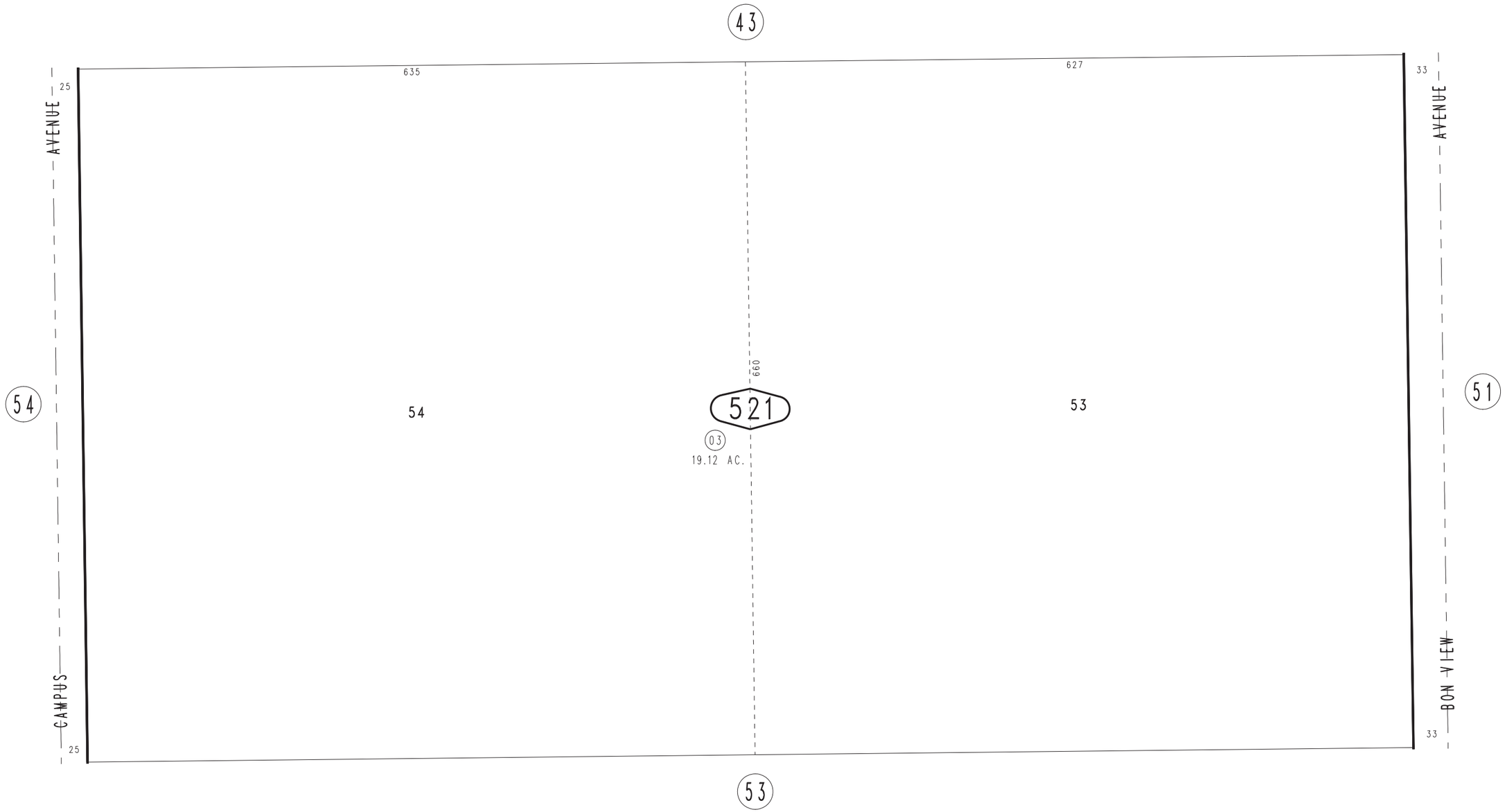

REVISED

November 2004

Ptn. S.W.1/4, Sec.8
T.2S.,R.7W.

Assessor's Map
Book 1052 Page 52
San Bernardino County