THIS MAP IS FOR THE PURPOSE OF AD VALOREM TAXATION ONLY.

Ptn. Tract No. 17653, M.B. 346/42-48

City of Chino Hills
Tax Rate Area
24028 24080

1028 - 68

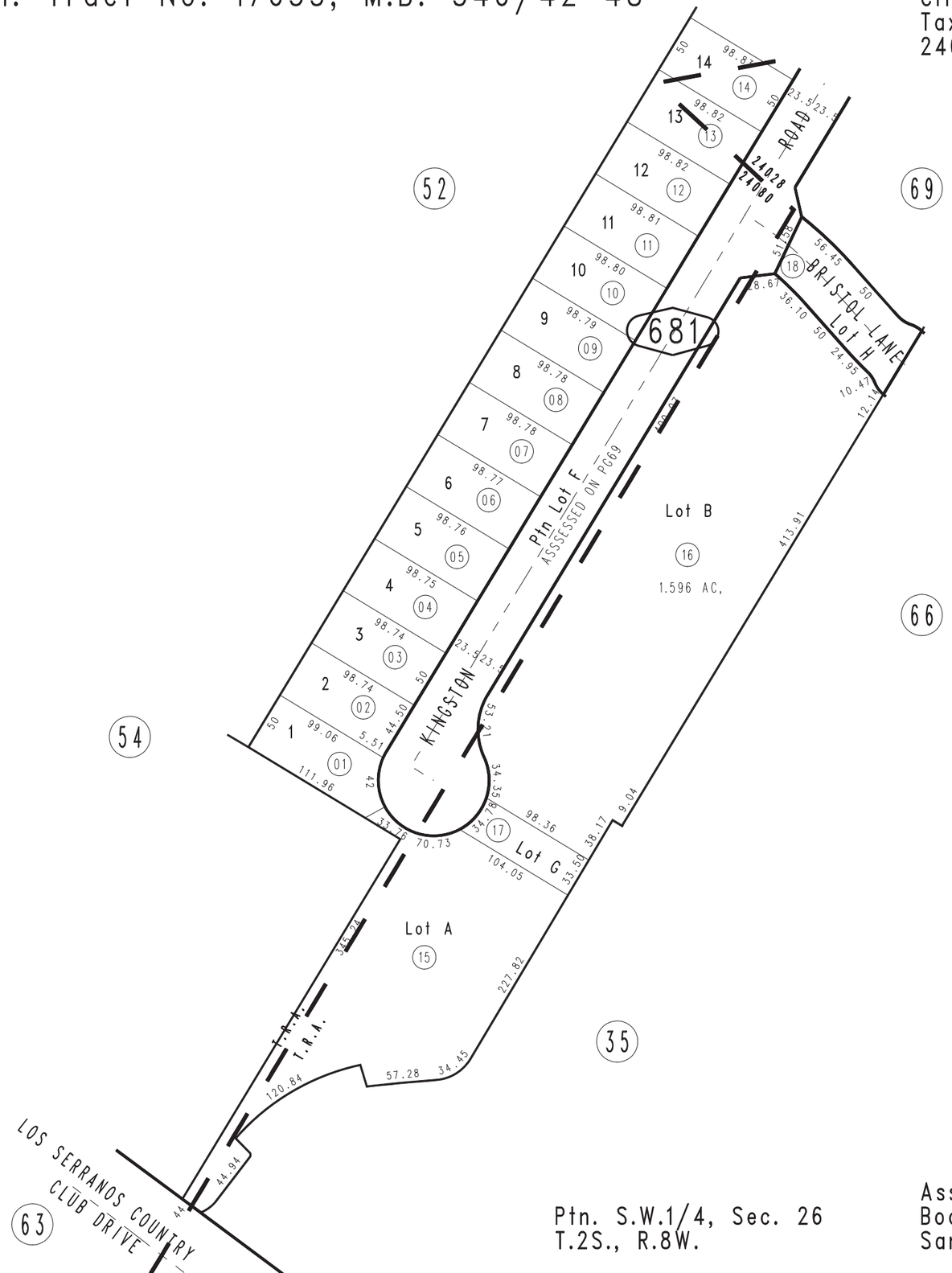

JUNE 2017 GW

Ptn. S.W.1/4, Sec. 26
T.2S., R.8W.

Assessor's Map
Book 1028 Page 68
San Bernardino County

REVISED