THIS MAP IS FOR THE PURPOSE OF AD VALOREM TAXATION ONLY.

Ptn. Rancho Santa Ana Del Chino, M.B. 6/15

City of Chino
Tax Rate Area
1160

1027 - 37

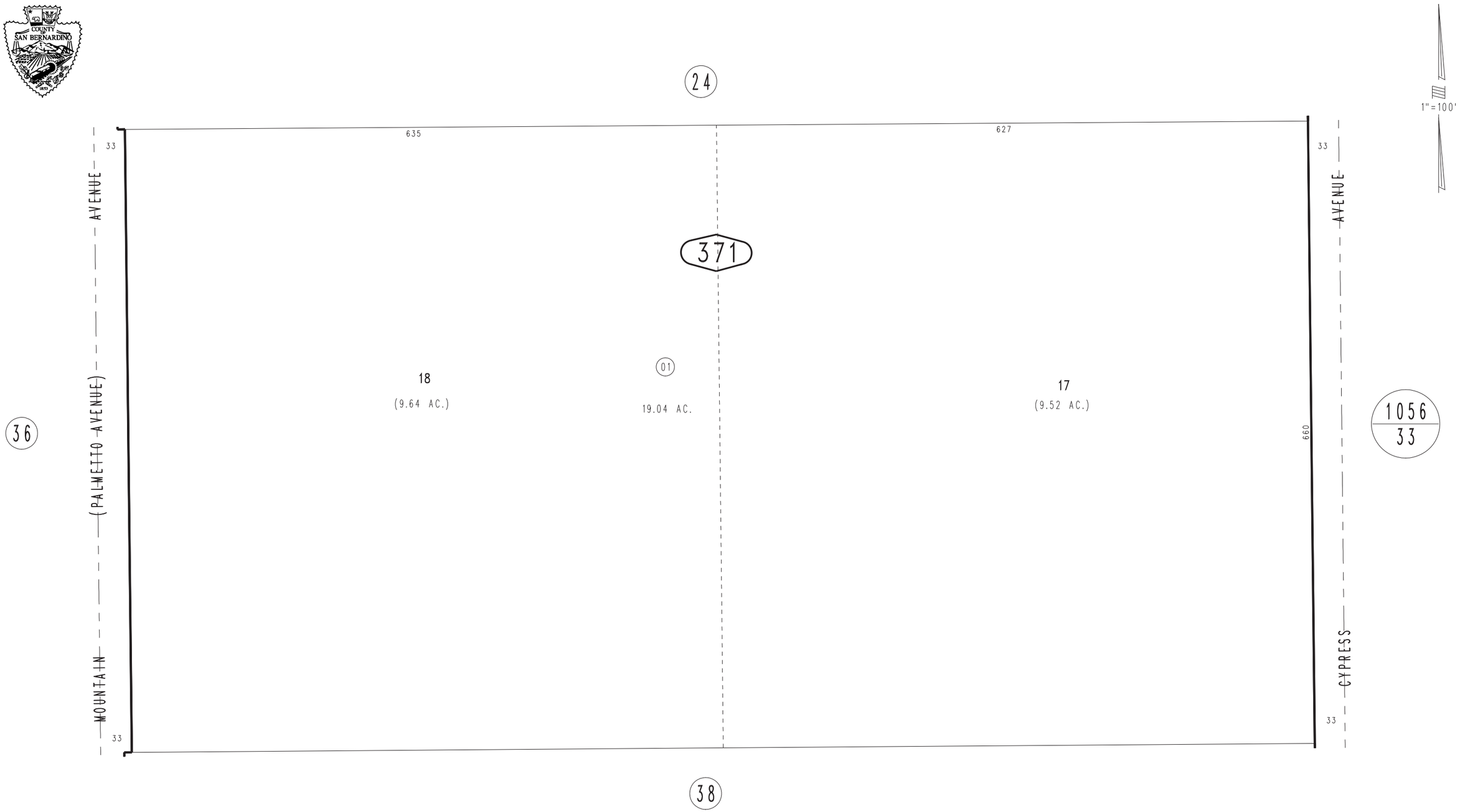

NOV. 1972

Ptn. N.E.1/4, Sec. 36
T.2S., R. 8W.

Assessor's Map
Book 1027 Page 37
San Bernardino County

REVISED
09/29/08 RM
03/12/09 KC