THIS MAP IS FOR THE PURPOSE OF AD VALOREM TAXATION ONLY.

N.1/2 T.3N.,R.17E., S.B.B.&M.

Needles Unified
Tax Rate Area
96005

0645- 05

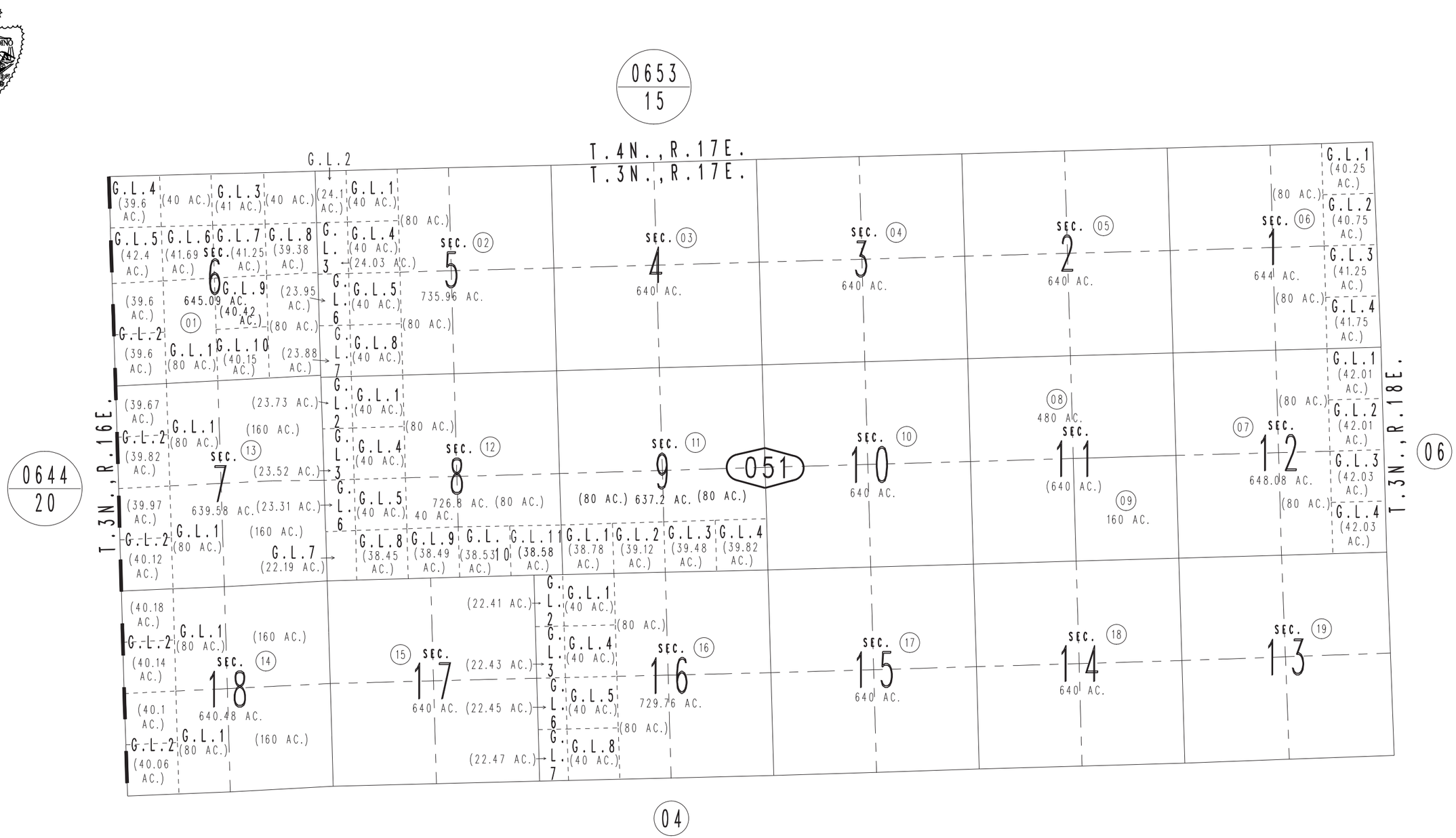

REVISED

June 2005

Assessor's Map
Book 0645 Page 05
San Bernardino County