THIS MAP IS FOR THE PURPOSE OF AD VALOREM TAXATION ONLY.

S.1/2, Fractional Sec.18, T.3N.,R.5E., S.B.B.&M.

Morongo Unified
Tax Rate Area
94043

0635- 23

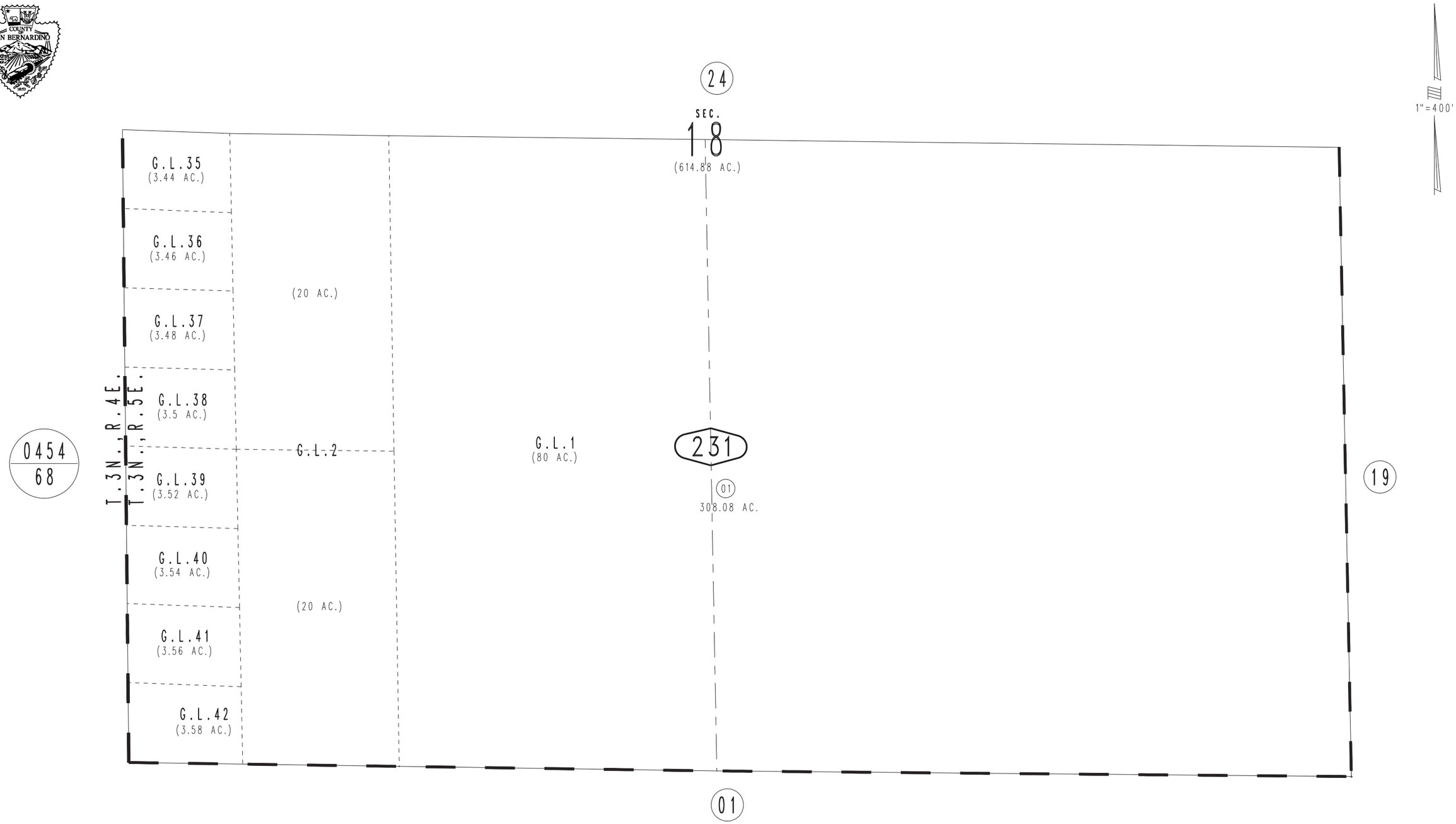

REVISED
04/23/13 RM-MC

Assessor's Map
Book 0635 Page 23
San Bernardino County

March 2005