THIS MAP IS FOR THE PURPOSE OF AD VALOREM TAXATION ONLY.

S.1/2 Sec.26, T.1N.,R.11E., S.B.B.&M.

Morongo Unified
Tax Rate Area
94118

0628 - 26

1"=400'

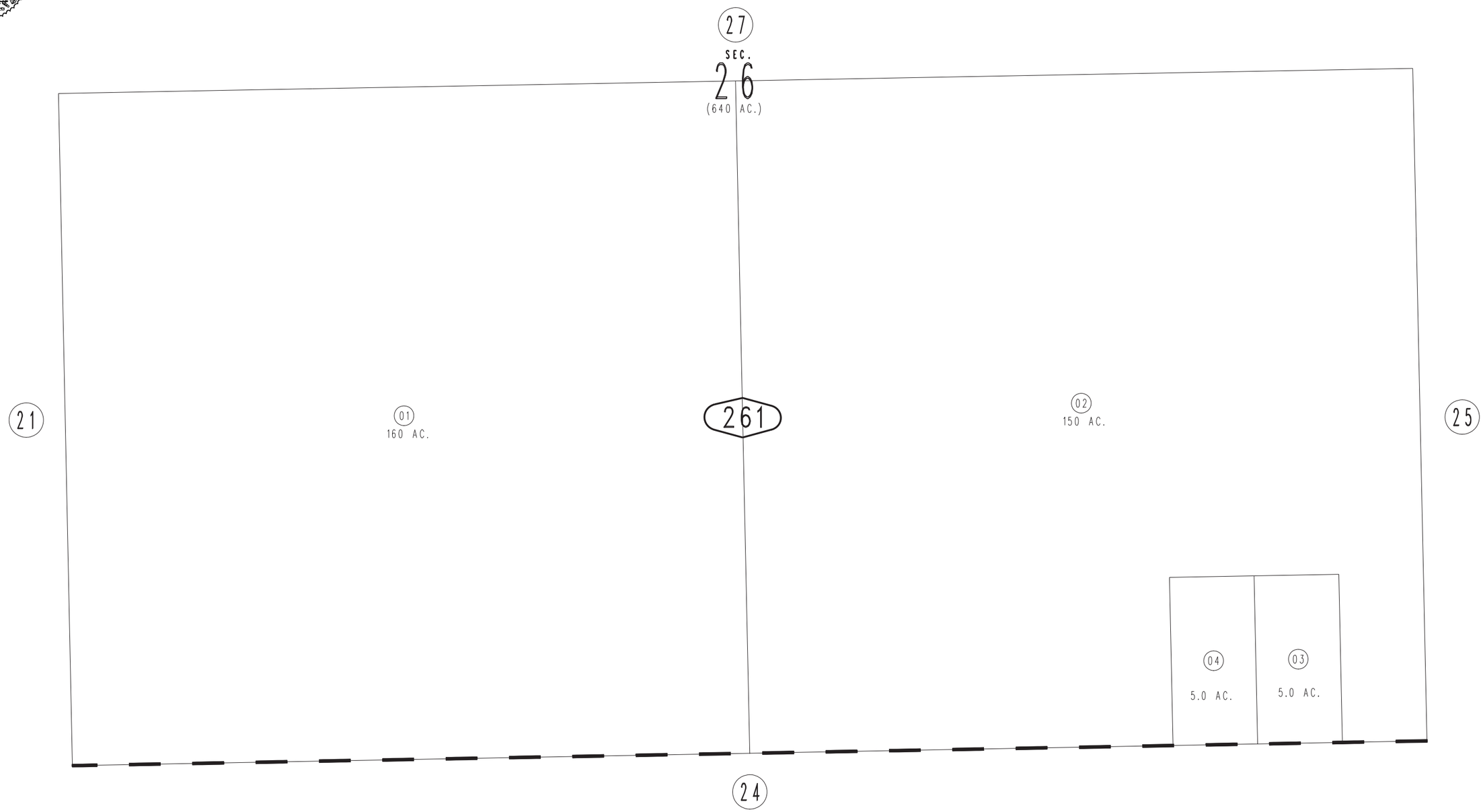

REVISED
04/05/16 KC-MC

Assessor's Map
Book 0628 Page 26
San Bernardino County

March 2005