THIS MAP IS FOR THE PURPOSE OF AD VALOREM TAXATION ONLY.

S.1/2 Fractional Sec.3, T.1N.,R.11E., S.B.B.&M.

Morongo Unified
Tax Rate Area
94118

0627 - 28

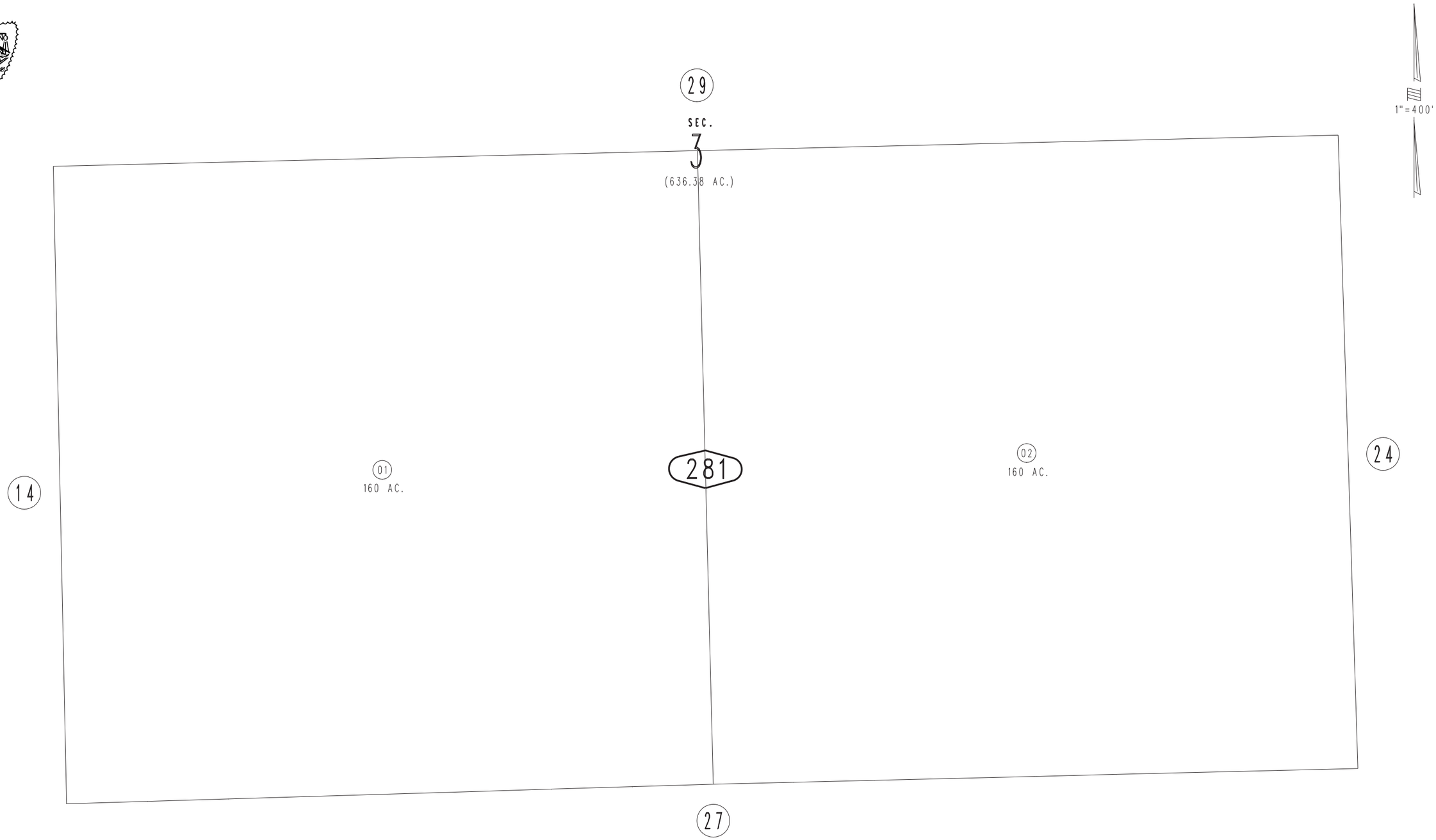

REVISED
03/28/16 KC-MC

March 2005

Assessor's Map
Book 0627 Page 28
San Bernardino County