THIS MAP IS FOR THE PURPOSE OF AD VALOREM TAXATION ONLY.

S.1/2 Sec.3, T.1N.,R.7E., S.B.B.&M.

Morongo Unified
Tax Rate Area
94107

0606 - 40

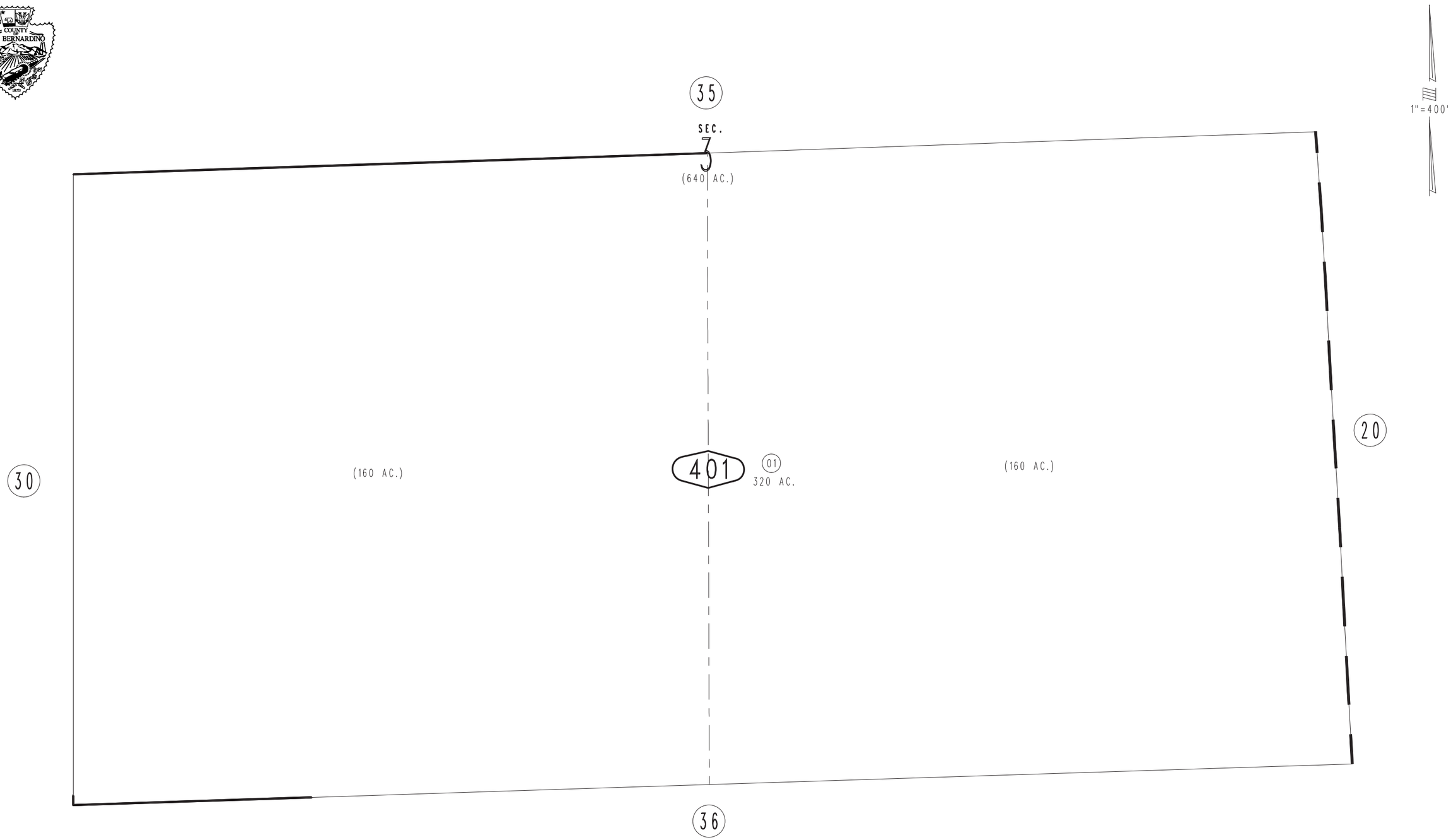

REVISED

Assessor's Map
Book 0606 Page 40
San Bernardino County

March 2005