THIS MAP IS FOR THE PURPOSE OF AD VALOREM TAXATION ONLY.

# S.1/2 Fractional Sec.4, T.1N.,R.7E., S.B.B.&M.

Morongo Unified
Tax Rate Area
94107

0606 - 30

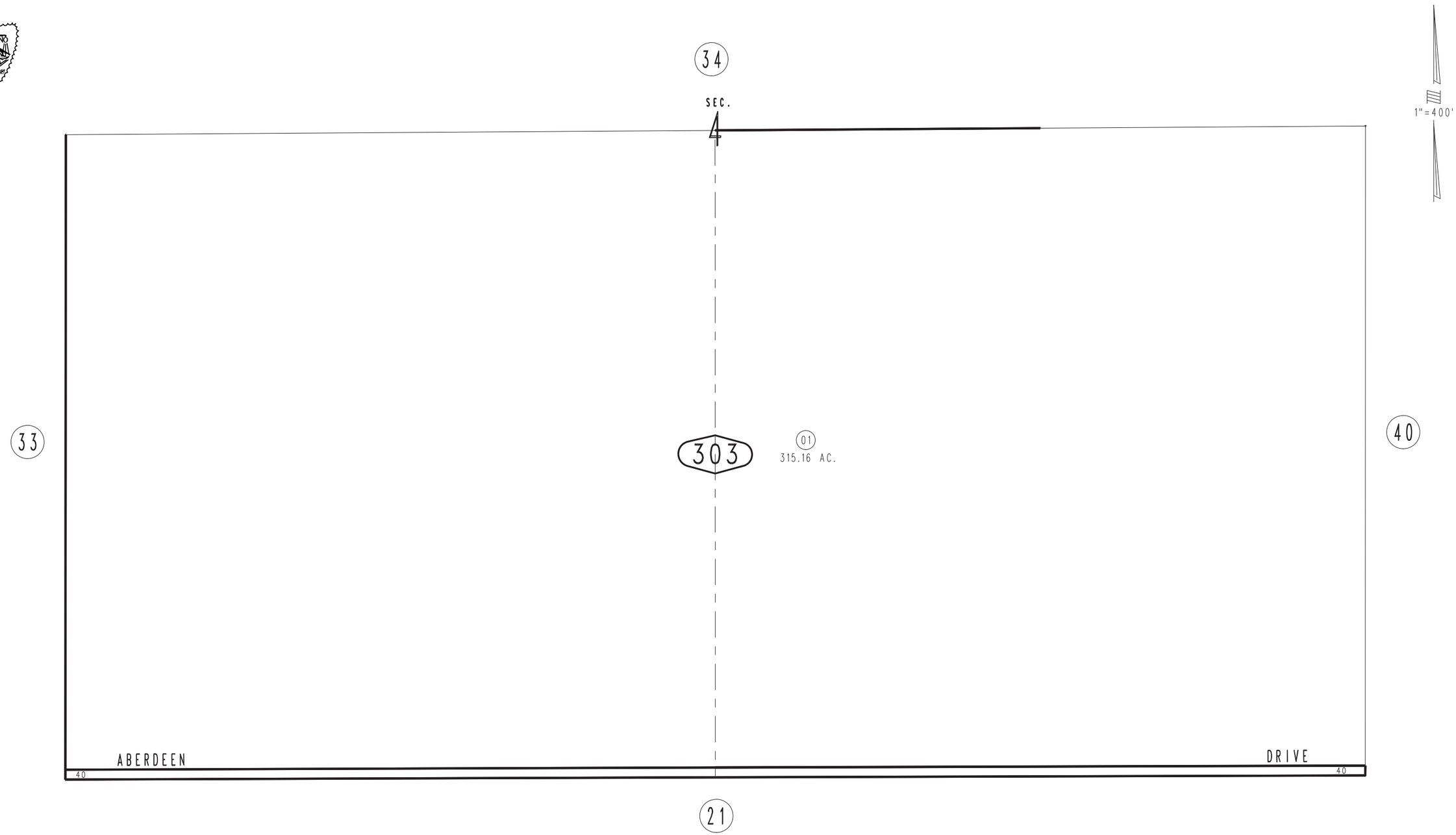


REVISED
06/06/13 LH-MC

Assessor's Map
Book 0606 Page 30
San Bernardino County

March 2005