THIS MAP IS FOR THE PURPOSE OF AD VALOREM TAXATION ONLY.

S.1/2, N.W.1/4 Fractional Sec.2, T.1N.,R.5E., S.B.B.&M.

Morongo Unified
Tax Rate Area
94044

0597 - 25

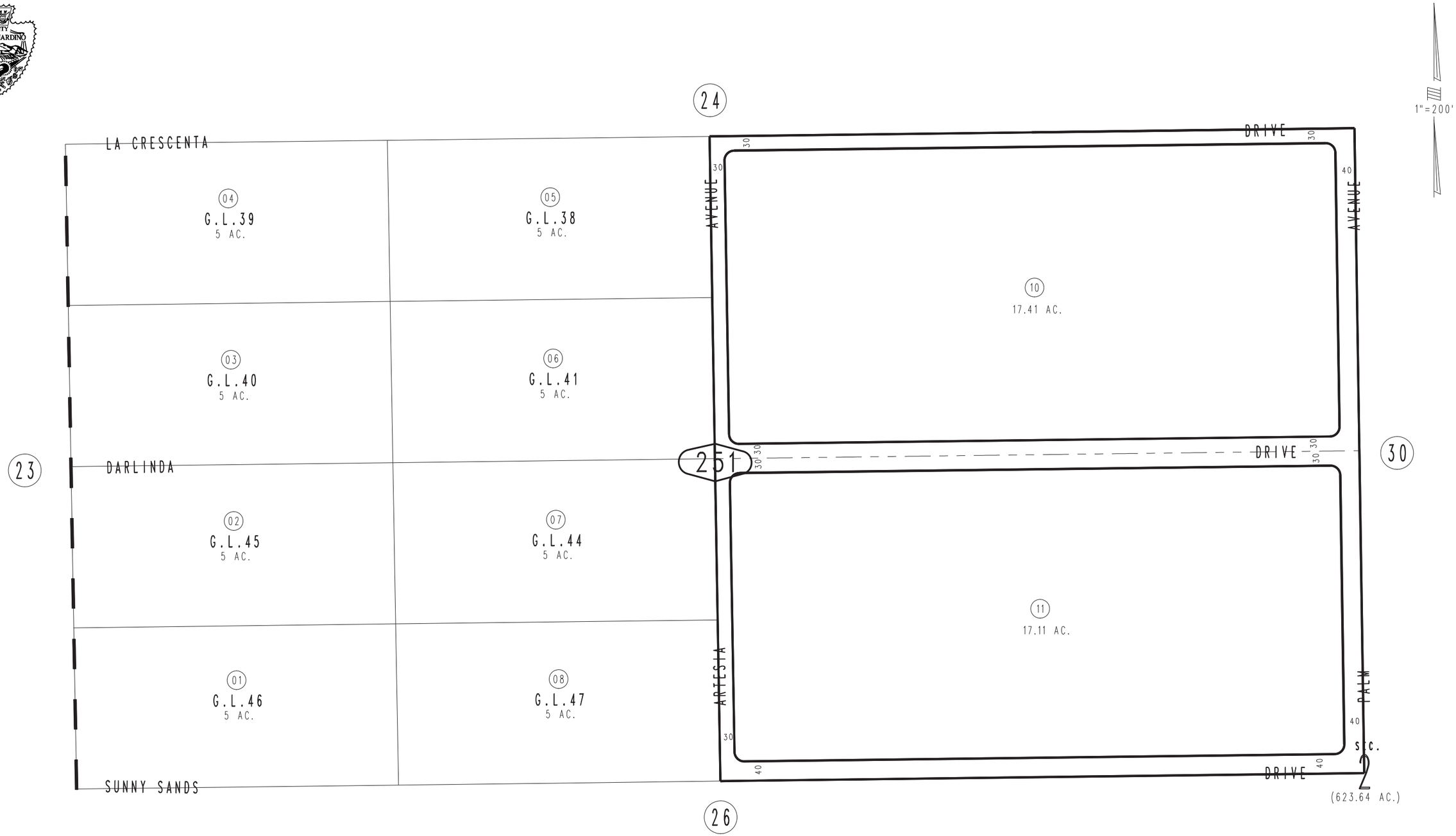

REVISED
07/17/12 LH

Assessor's Map
Book 0597 Page 25
San Bernardino County

February 2005