THIS MAP IS FOR THE PURPOSE OF AD VALOREM TAXATION ONLY.

Sec.9&10, T.1S.,R.11E., S.B.B.&M.

Morongo Unified
Tax Rate Area
94002

0592 - 08

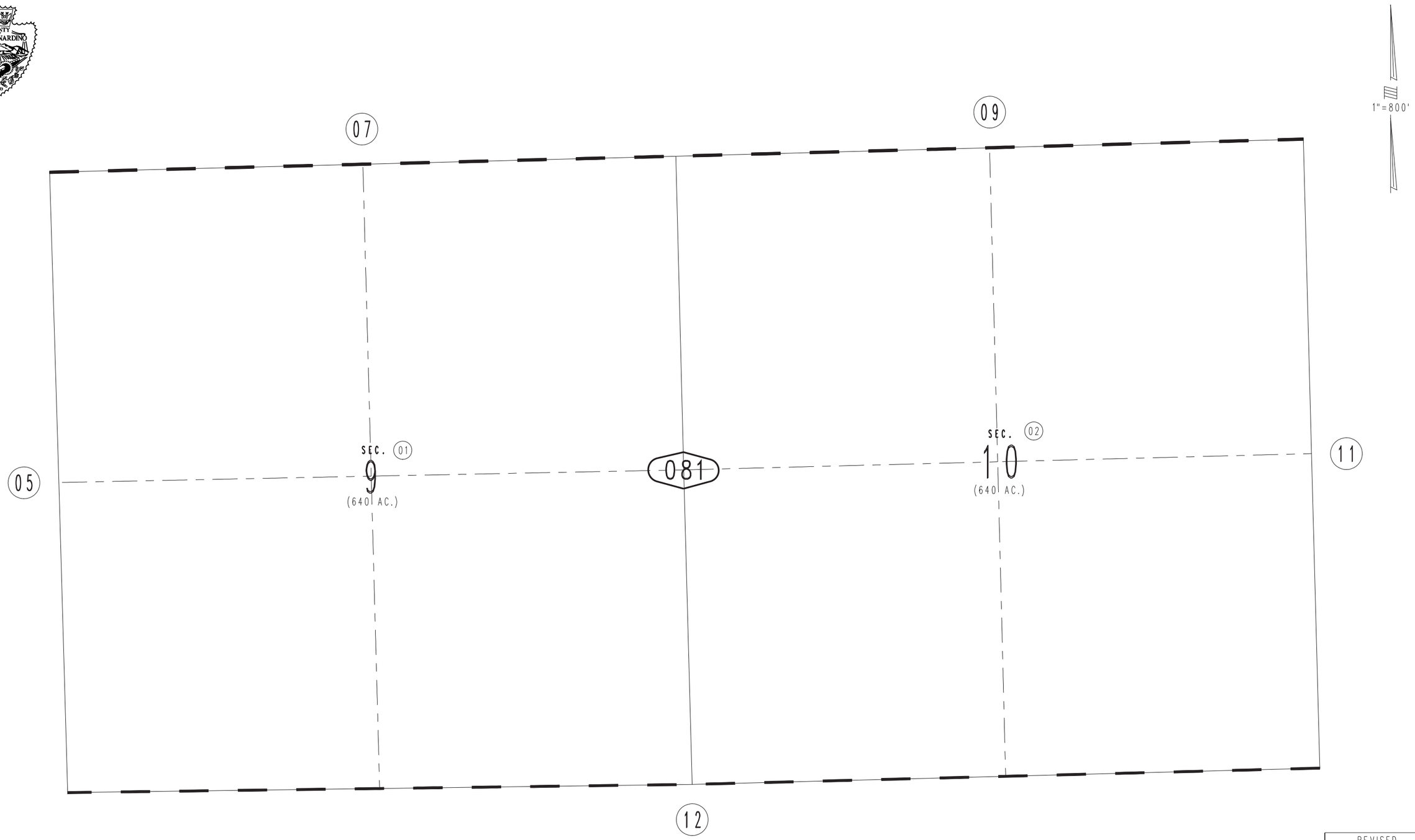

REVISED

Assessor's Map
Book 0592 Page 08
San Bernardino County

December 2004