THIS MAP IS FOR THE PURPOSE OF AD VALOREM TAXATION ONLY.

Fractional Sec.7 & Sec.8, T.1S.,R.11E., S.B.B.&M.

Morongo Unified
Tax Rate Area
94002

0592 - 05

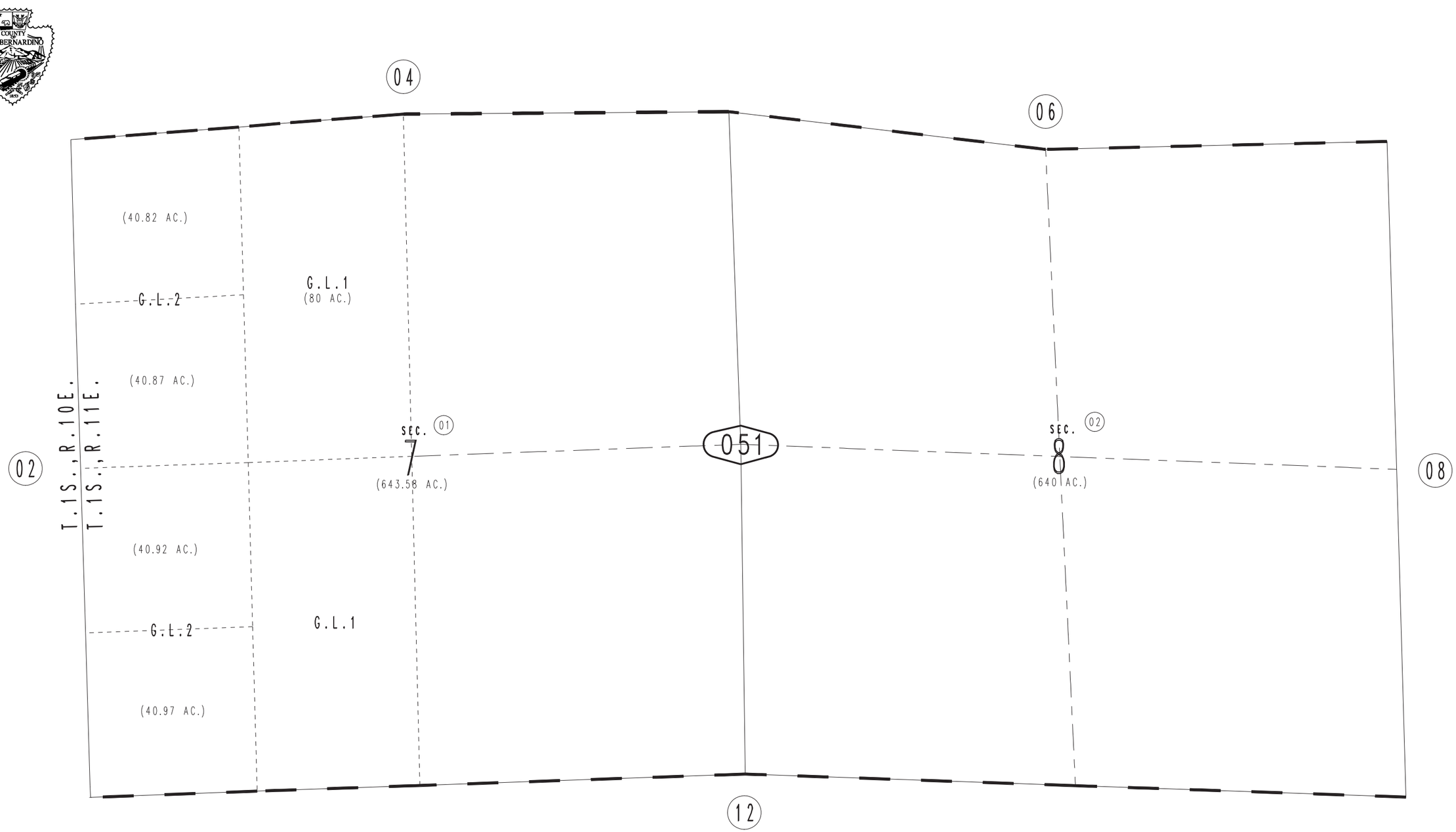

REVISED

Assessor's Map
Book 0592 Page 05
San Bernardino County

December 2004