THIS MAP IS FOR THE PURPOSE OF AD VALOREM TAXATION ONLY.

Ptn. Sec.32, T.1S.,R.4E., S.B.B.&M.

Morongo Unified
Tax Rate Area
94011,94068

0584- 15

1"=400'

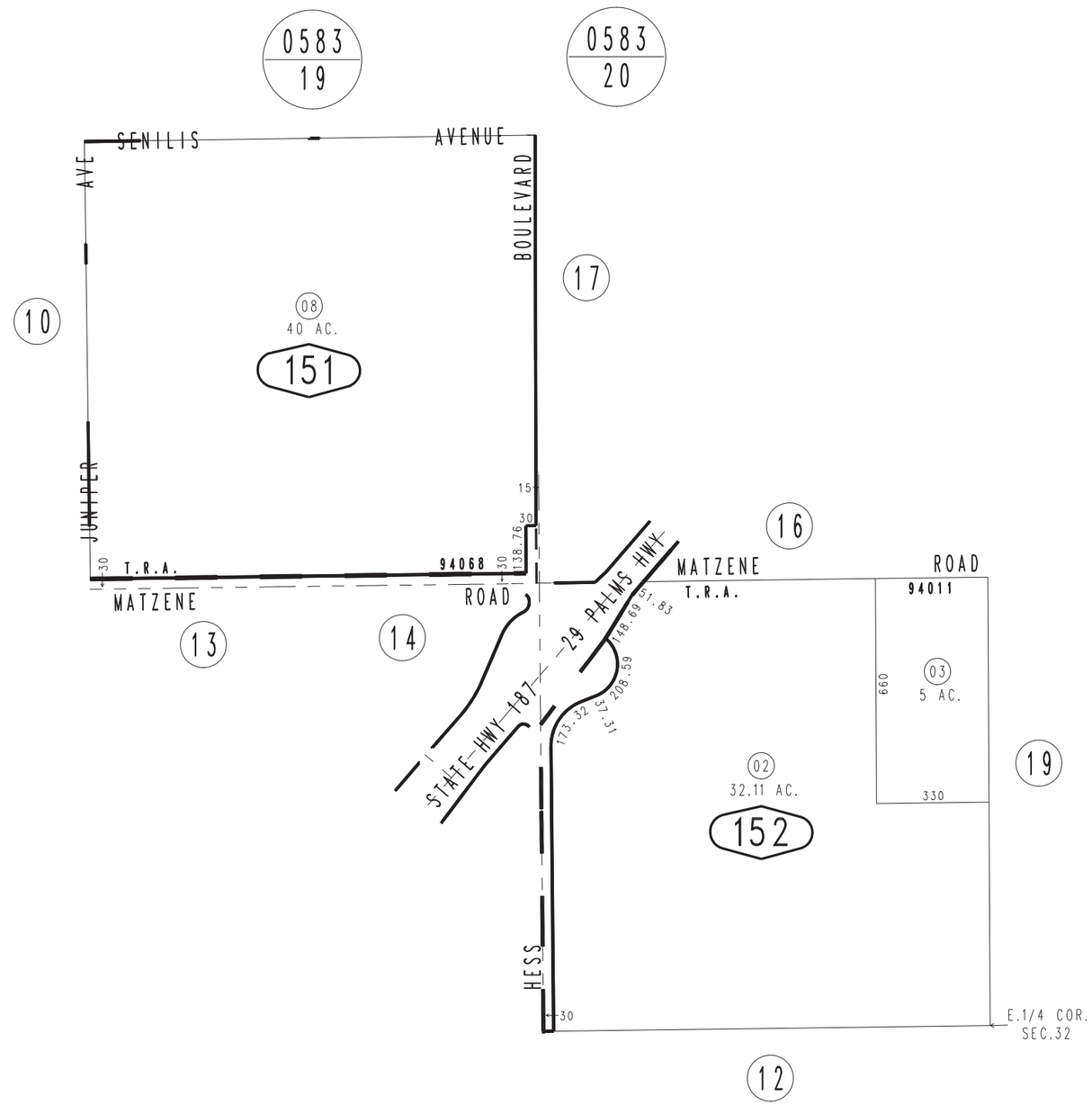

REVISED

Assessor's Map
Book 0584 Page 15
San Bernardino County

December 2004