THIS MAP IS FOR THE PURPOSE OF AD VALOREM TAXATION ONLY.

N.1/2, S.W.1/4, Fractional Sec.31, T.1S.,R.4E., S.B.B.&M.

Morongo Unified
Tax Rate Area
94011

0584- 04

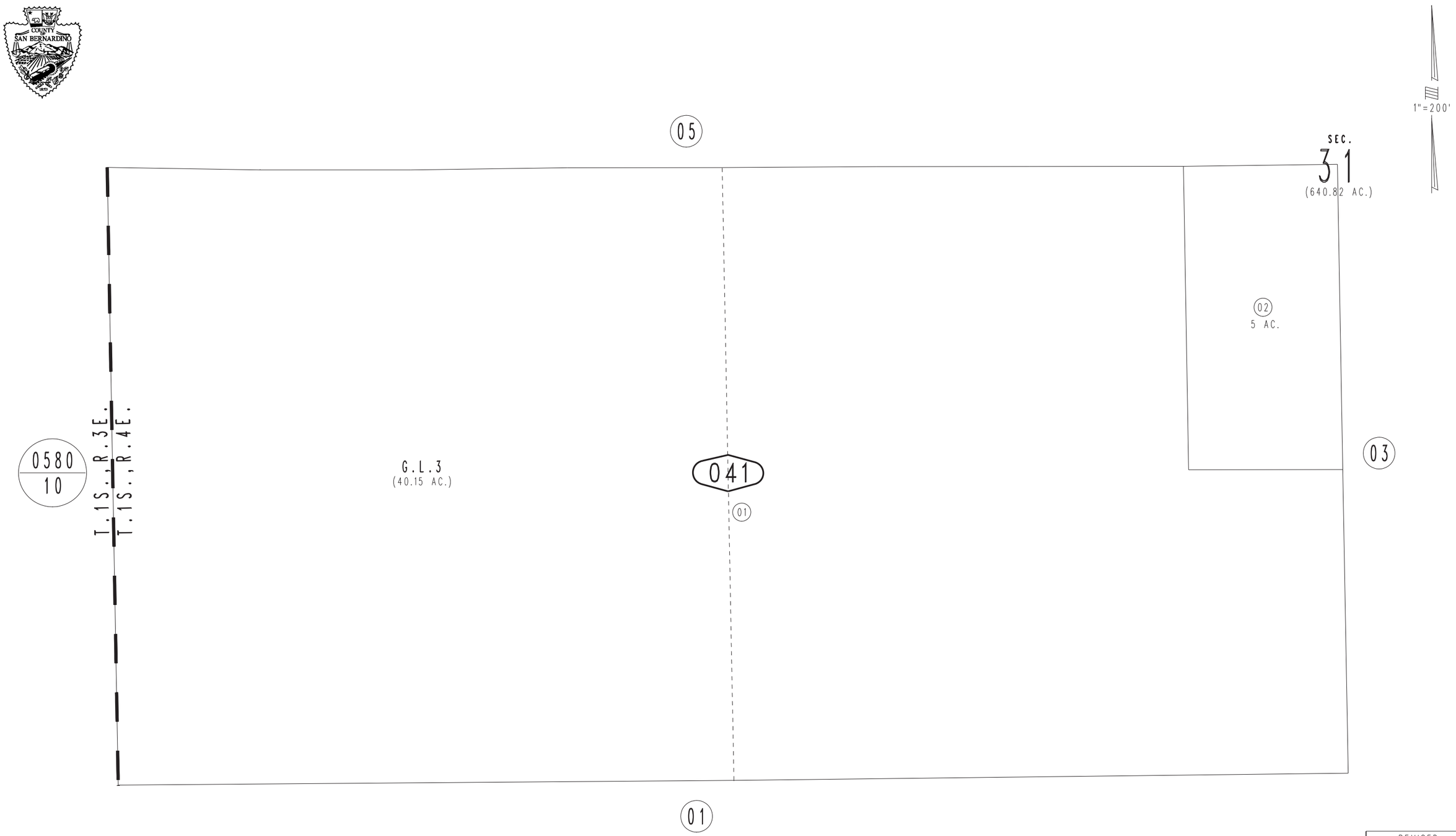

REVISED

Assessor's Map
Book 0584 Page 04
San Bernardino County

December 2004