THIS MAP IS FOR THE PURPOSE OF AD VALOREM TAXATION ONLY.

Sec.35&36, T.6N.,R.14E., S.B.B.&M.

Needles Unified
Tax Rate Area
96008

0558 - 19

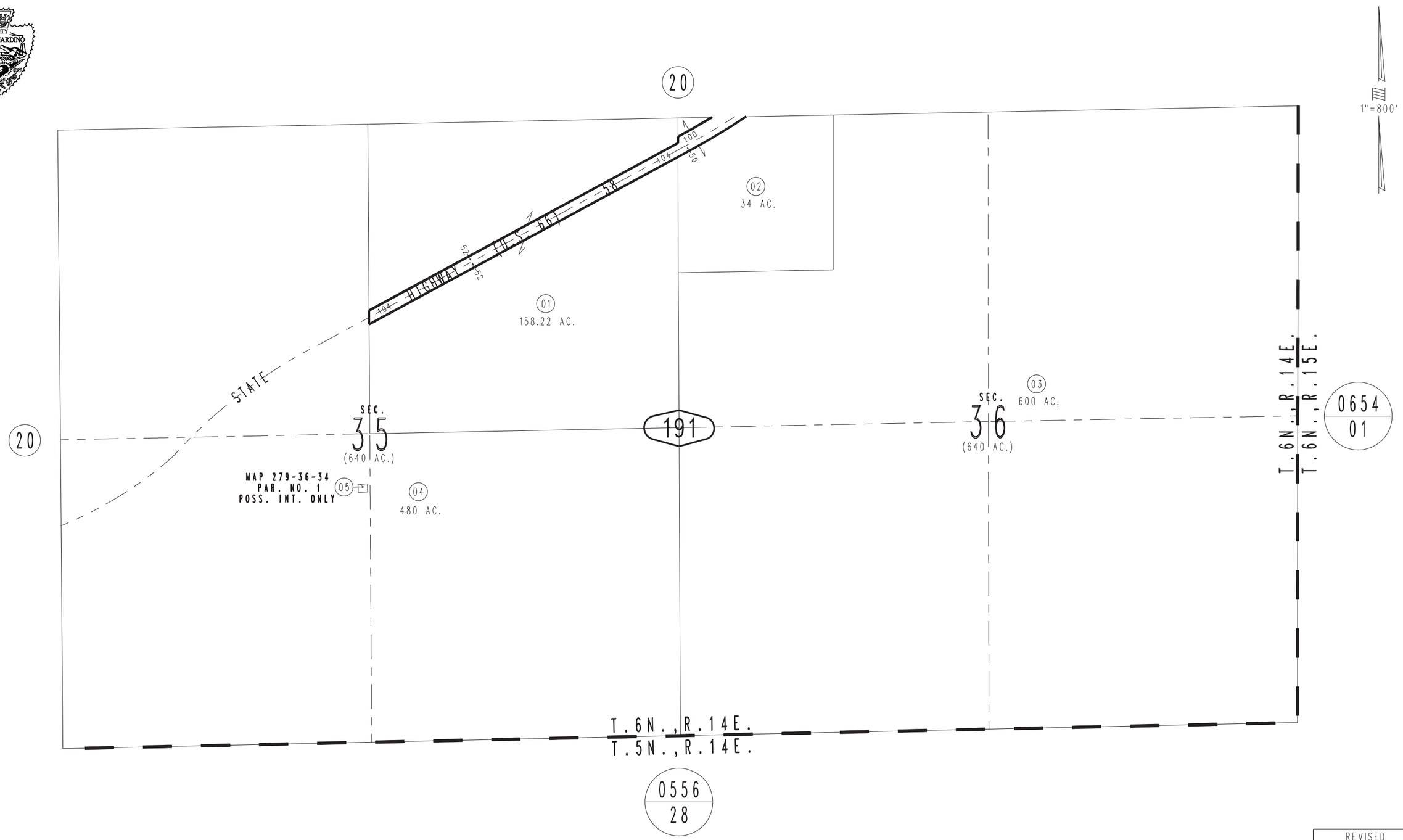

REVISED

Assessor's Map
Book 0558 Page 19
San Bernardino County

July 2005