THIS MAP IS FOR THE PURPOSE OF AD VALOREM TAXATION ONLY.

Sec.15&14, T.12N.,R.7E., S.B.B.&M.

Baker Unified
Tax Rate Area
55003

0543- 30

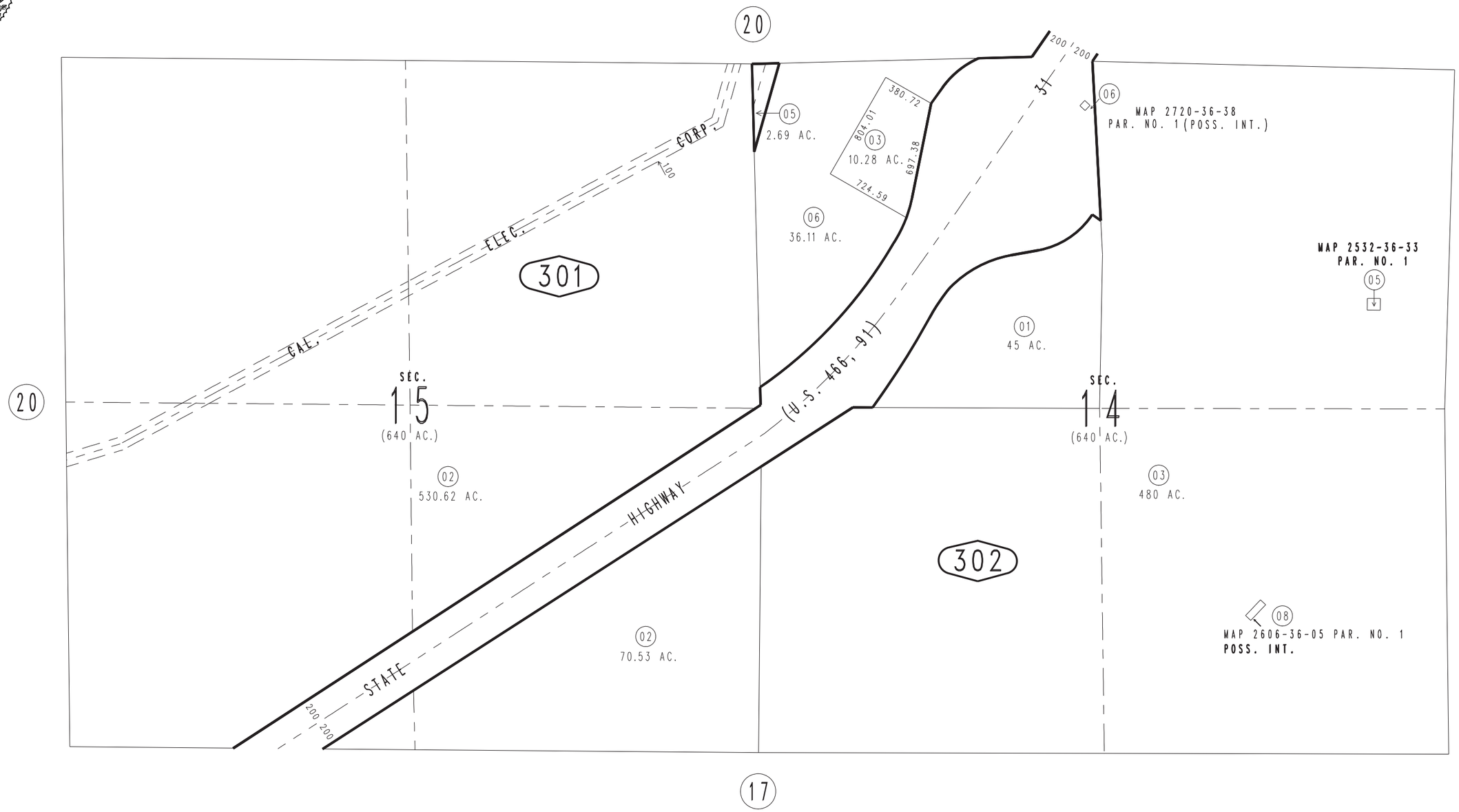

REVISED
01/09/19 GW
06/18/19 RU

Assessor's Map
Book 0543 Page 30
San Bernardino County

June 2005