THIS MAP IS FOR THE PURPOSE OF AD VALOREM TAXATION ONLY.

Sec.34&35, T.11N.,R.4E., S.B.B.&M.

Silver Valley Unified
Tax Rate Area
109006

0541 - 20

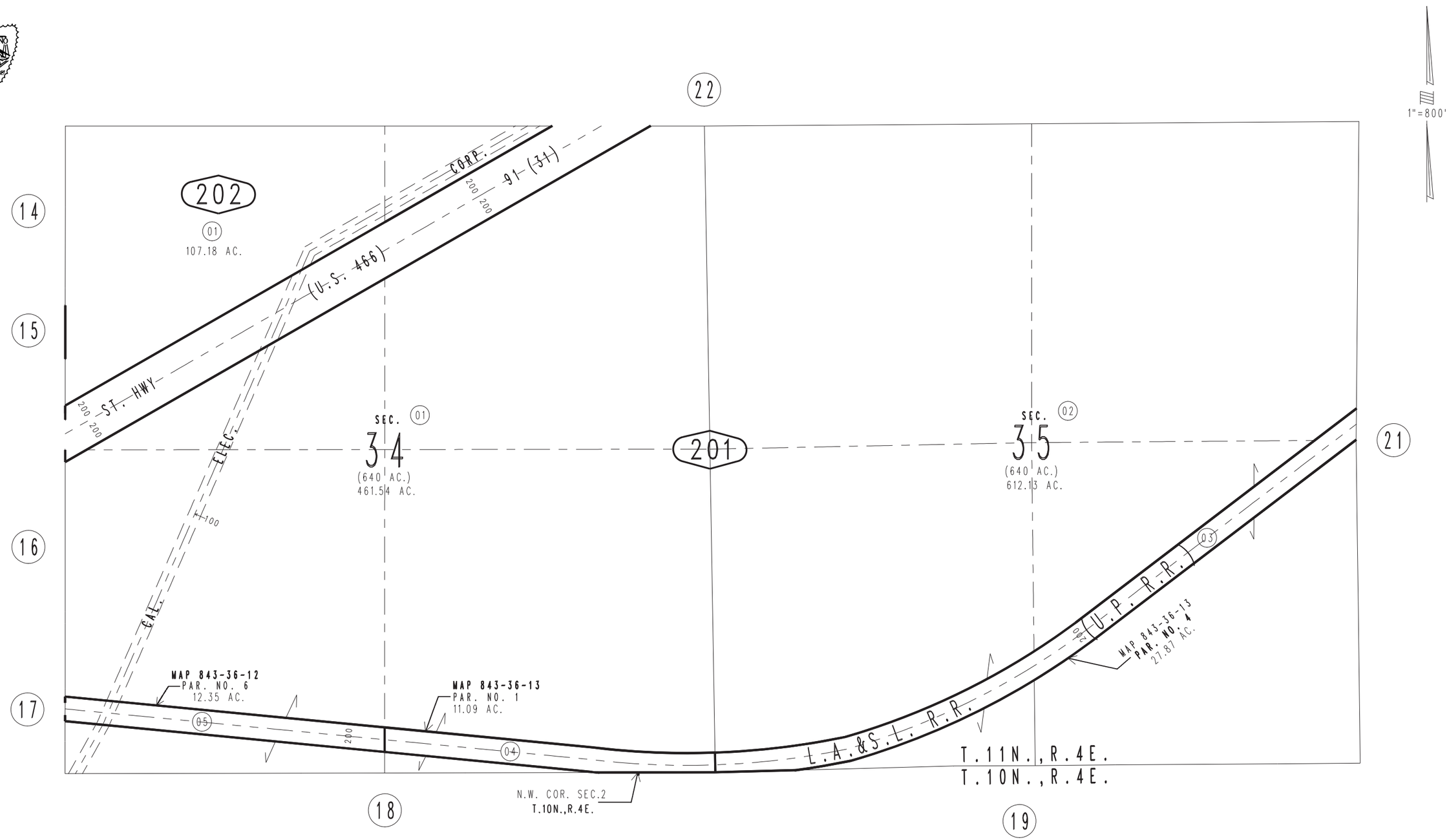

REVISED
11/15/10 GW-MC

Assessor's Map
Book 0541 Page 20
San Bernardino County

June 2005