THIS MAP IS FOR THE PURPOSE OF AD VALOREM TAXATION ONLY.

N.1/2 S.E.1/4 Sec.33, T.11N.,R.4E., S.B.B.&M.

Silver Valley Unified 0541 - 16
Tax Rate Area
109006

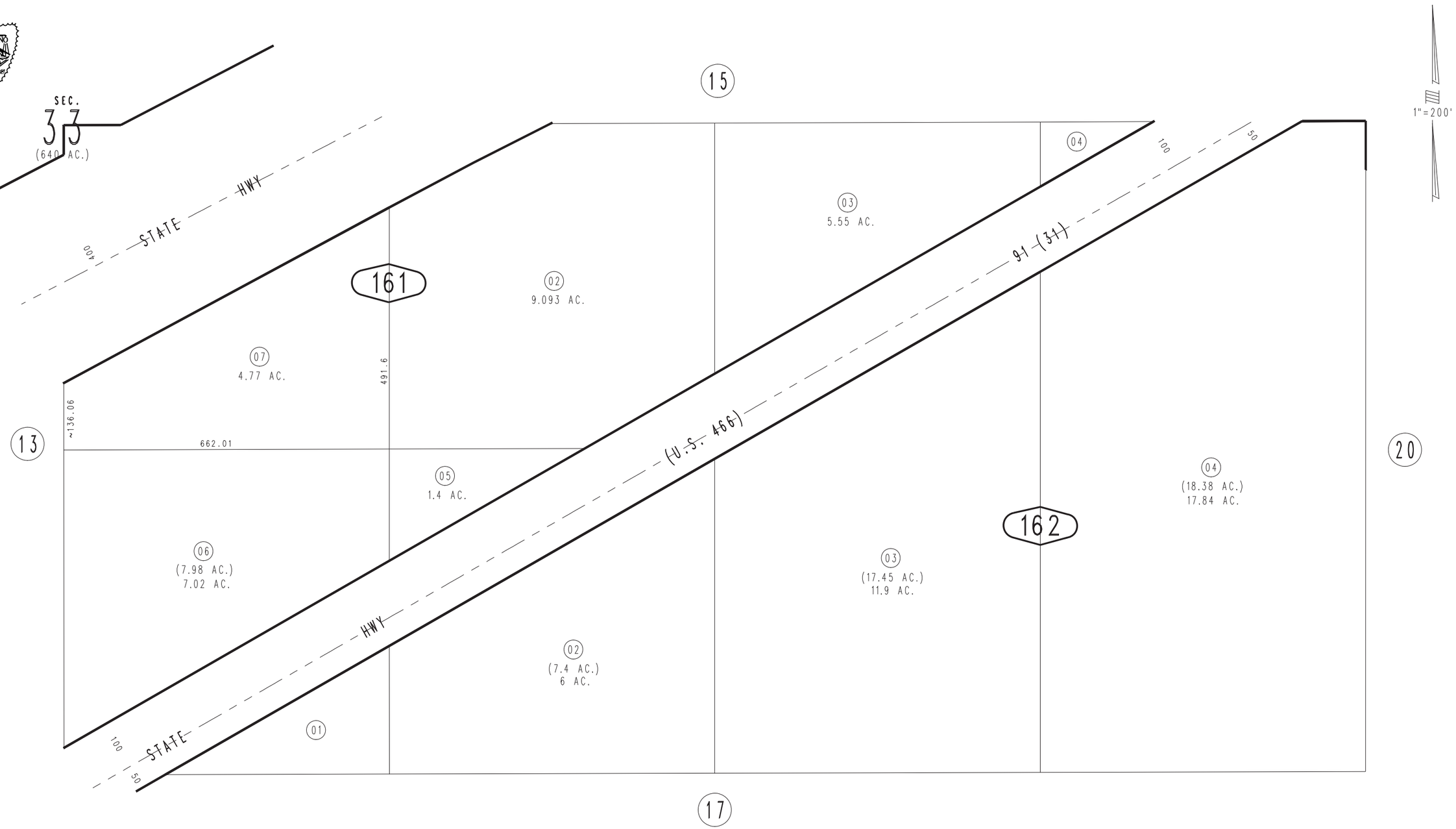

REVISED

June 2005

Assessor's Map
Book 0541 Page 16
San Bernardino County