THIS MAP IS FOR THE PURPOSE OF AD VALOREM TAXATION ONLY.

Ptn. N.1/2 Sec.26, T.10N.,R.3E., S.B.B.&M.

Silver Valley Unified 0539 - 18
Tax Rate Area
109077

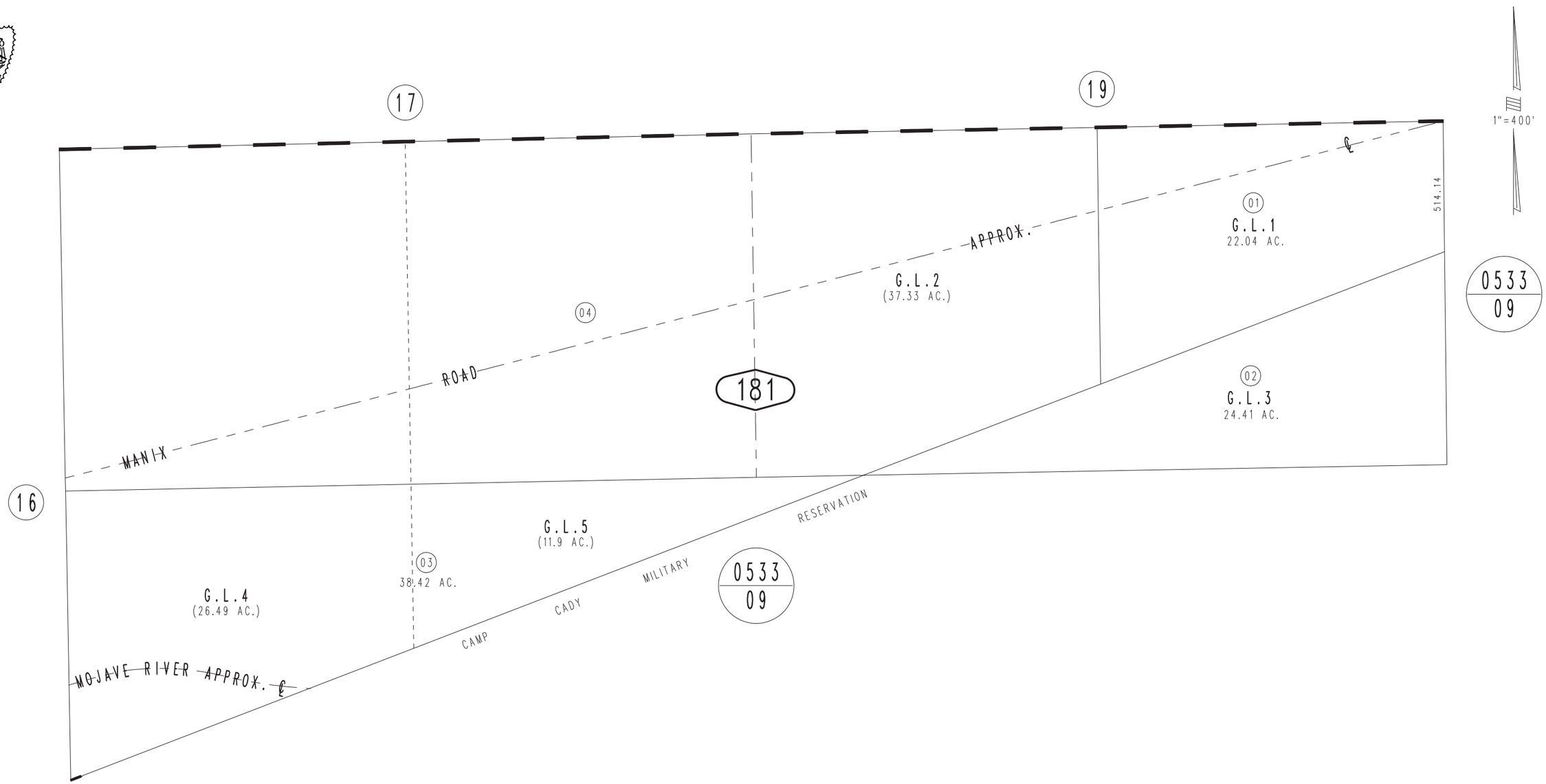

REVISED

June 2005

Assessor's Map
Book 0539 Page 18
San Bernardino County