THIS MAP IS FOR THE PURPOSE OF AD VALOREM TAXATION ONLY.

Sec.34&35, T.10N.,R.2E., S.B.B.&M.

Silver Valley Unified 0538 - 19
Tax Rate Area
109006,109009
109070,109073

1" = 800'

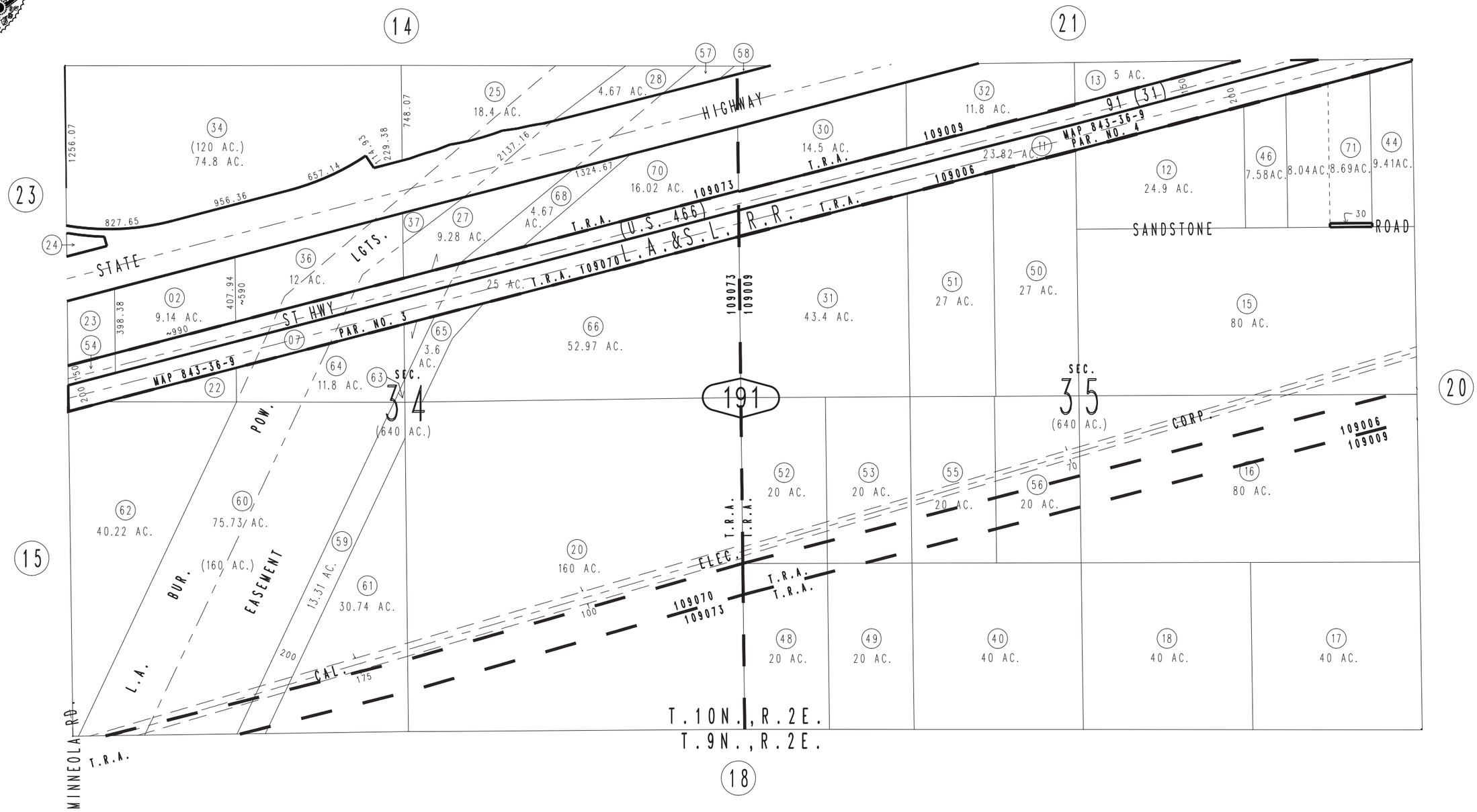

REVISED
12/19/14 KC

Assessor's Map
Book 0538 Page 19
San Bernardino County

May 2005