THIS MAP IS FOR THE PURPOSE OF AD VALOREM TAXATION ONLY.

Ptn. N.1/2 Fractional Sec.6, T.9N.,R.2E., S.B.B.&M.

Silver Valley Unified
Tax Rate Area
109073,109079

0538 - 02

1"=400'

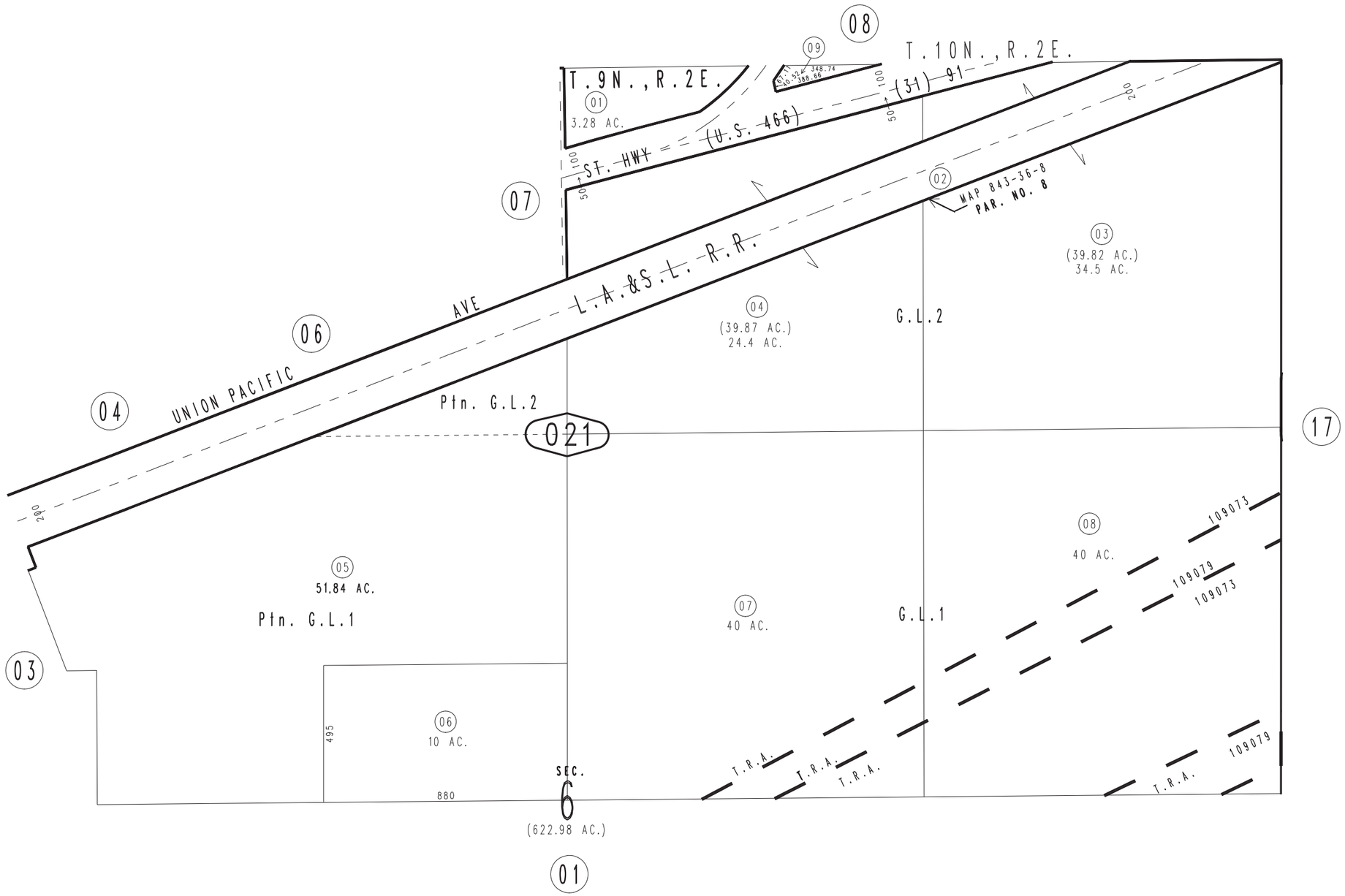

REVISED
12/29/10 LH

Assessor's Map
Book 0538 Page 02
San Bernardino County

May 2005