THIS MAP IS FOR THE PURPOSE OF AD VALOREM TAXATION ONLY.

Ptn. N.1/2 Sec.29, Ptn. S.1/2 Fractional Sec.19 & Ptn. Fractional Sec.30
T.30S.,R.41E., M.D.B.&M.

Rand Joint 0503- 36
Tax Rate Area
100000

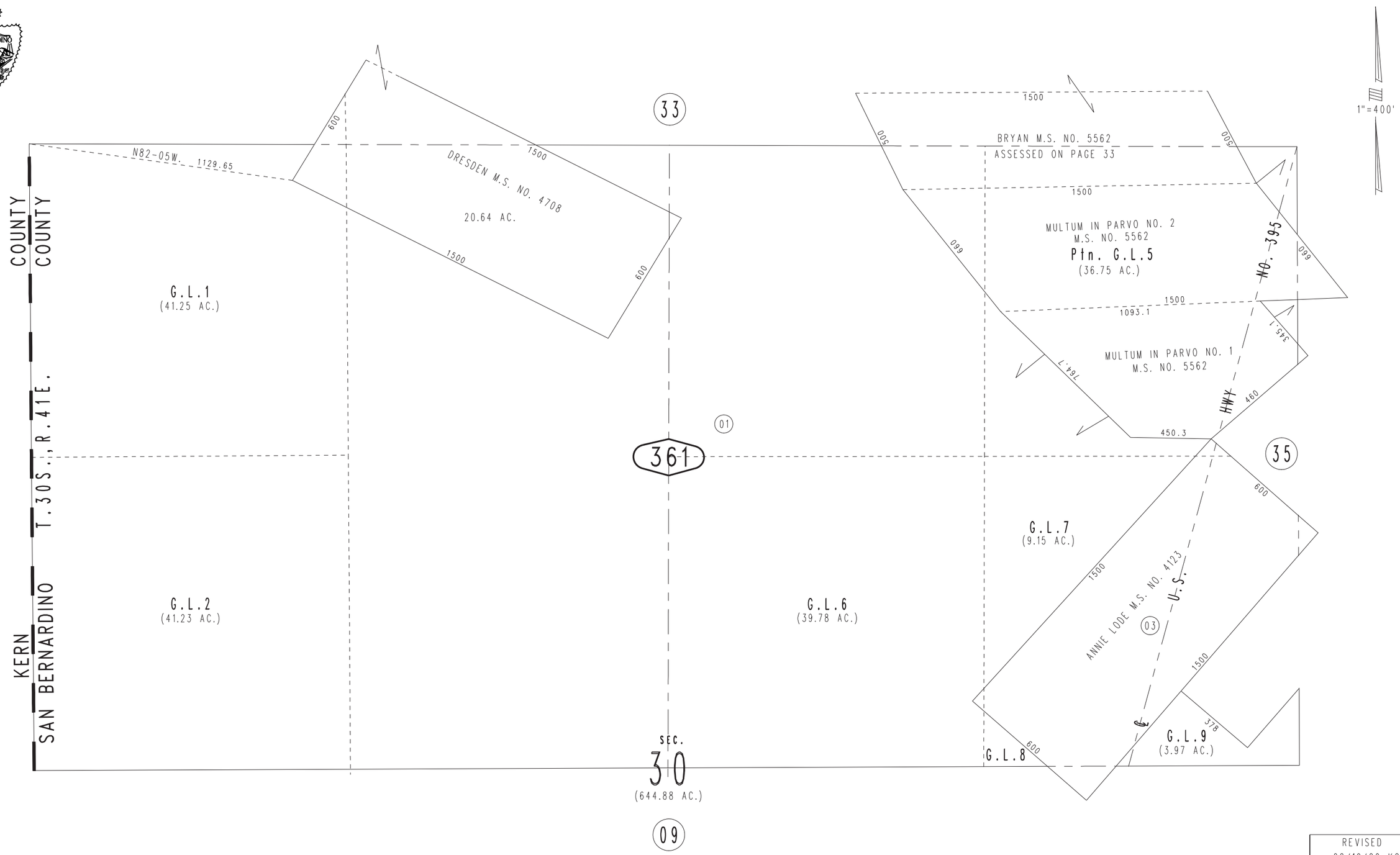

REVISED
02/19/20 KC

Assessor's Map
Book 0503 Page 36
San Bernardino County

June 2005