THIS MAP IS FOR THE PURPOSE OF AD VALOREM TAXATION ONLY.

Sec.23 & S.1/2 Sec.24, T.10N.,R.4W., S.B.B.&M.

Barstow Unified
Tax Rate Area
56053,56057

0496 - 11

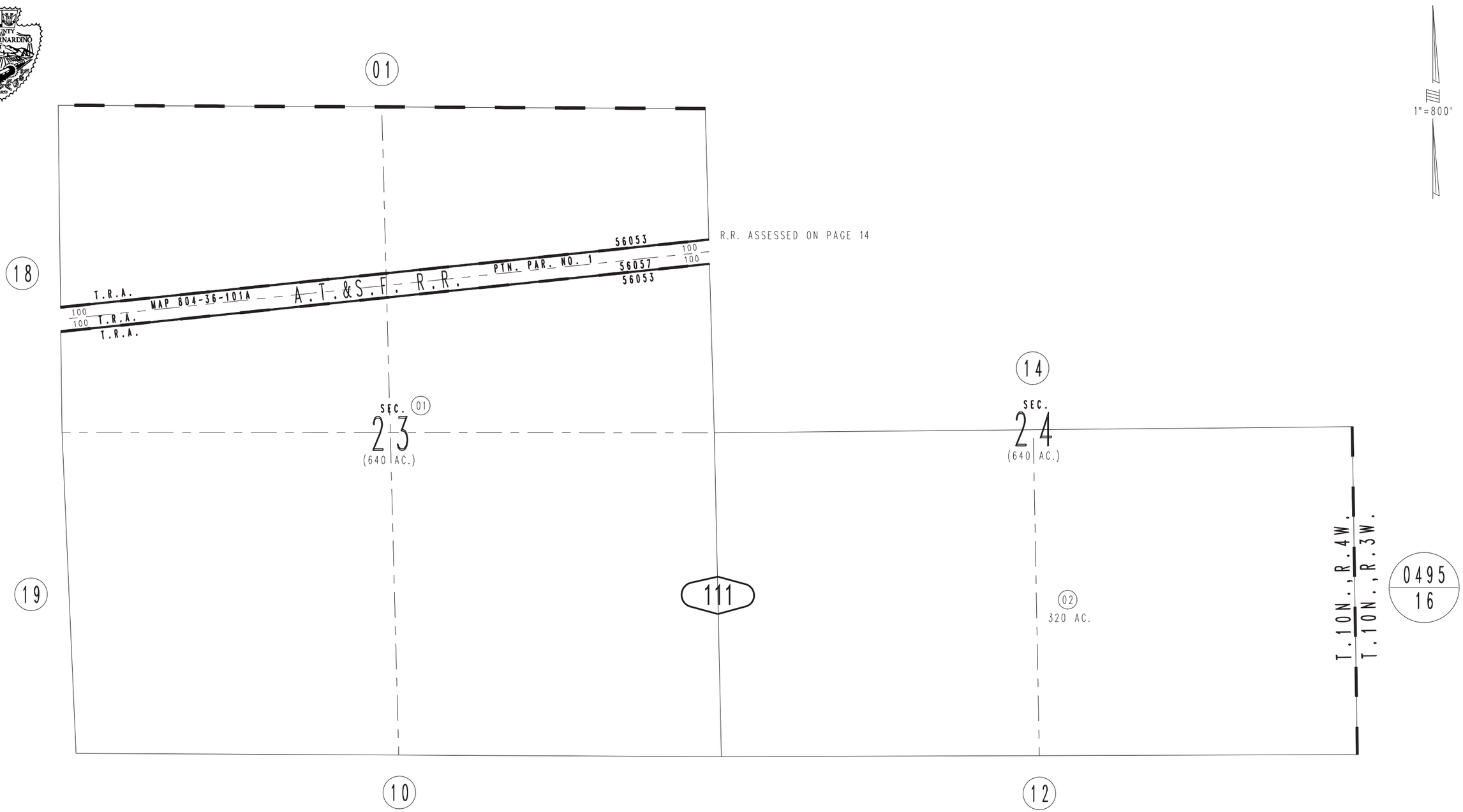

REVISED

Assessor's Map
Book 0496 Page 11
San Bernardino County

June 2005