THIS MAP IS FOR THE PURPOSE OF AD VALOREM TAXATION ONLY.

S.1/2 Sec.12, T.27S.,R.40E., M.D.B.&M.

Sierra Sands Jt. Unified
Tax Rate Area
100010

0483- 24

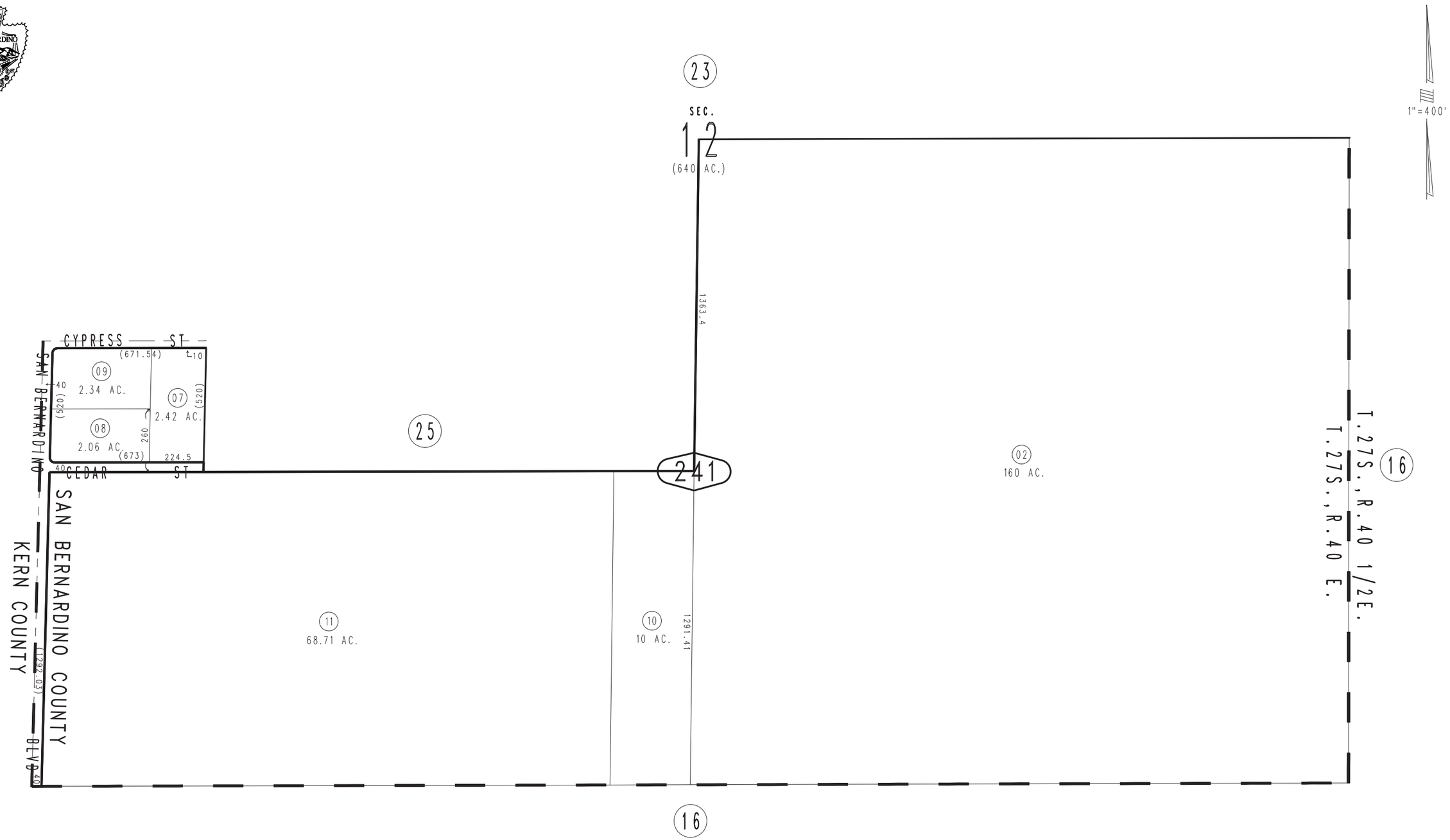

REVISED
05/11/12 RM

Assessor's Map
Book 0483 Page 24
San Bernardino County

May 2005