THIS MAP IS FOR THE PURPOSE OF AD VALOREM TAXATION ONLY.

S.W.1/4 Sec.21, T.5N.,R.4W., S.B.B.&M.

City of Victorville
Tax Rate Area
12135,12022

0477- 26

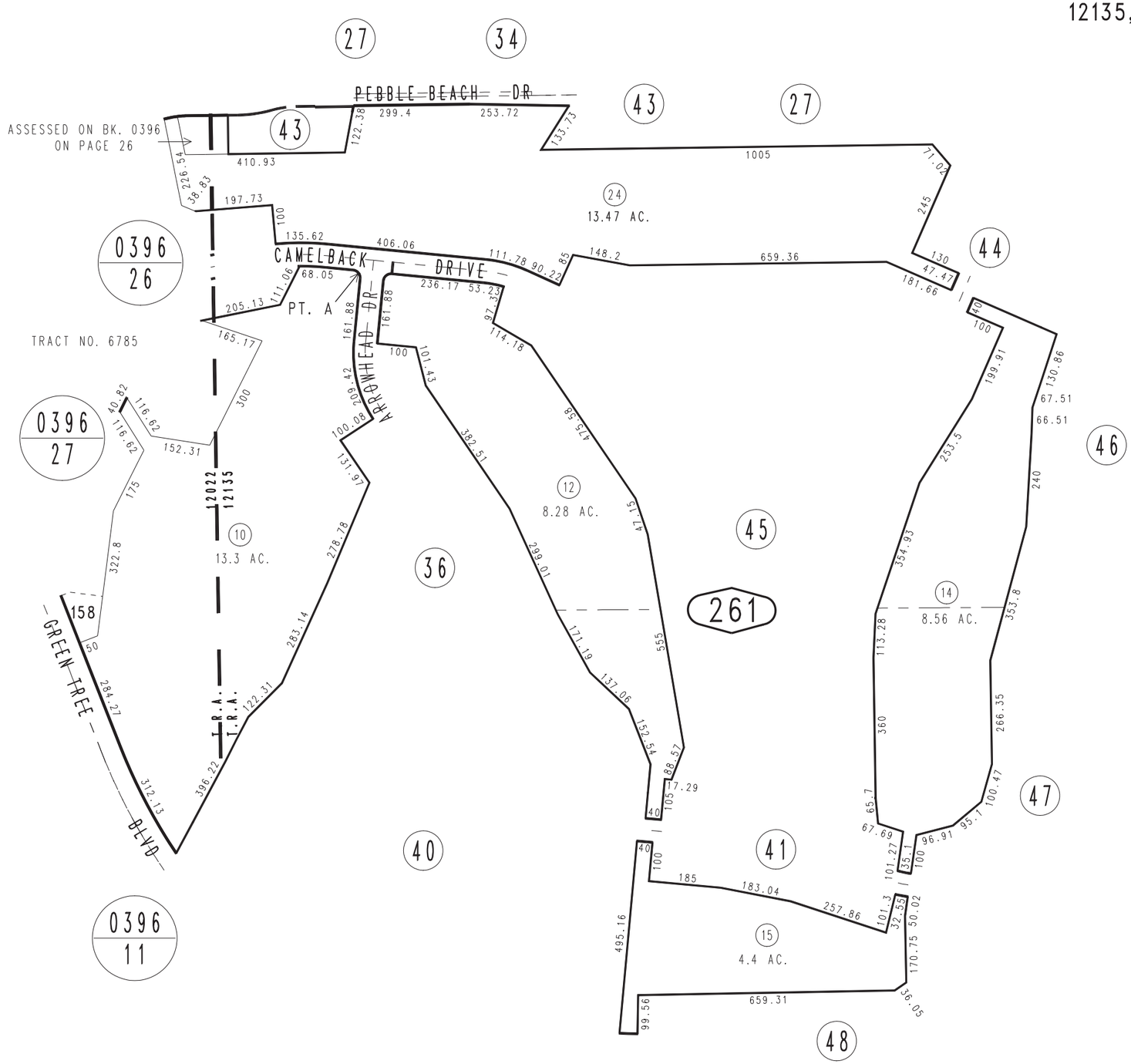

1"=300'

REVISED
10/23/12 KA-MC

Assessor's Map
Book 0477 Page 26
San Bernardino County

June 2004