THIS MAP IS FOR THE PURPOSE OF AD VALOREM TAXATION ONLY.

Ptn. Highway Addition To Victorville
M.B. 23/45-46

City of Victorville
Tax Rate Area
12135,12141

0477- 16

1"=200'

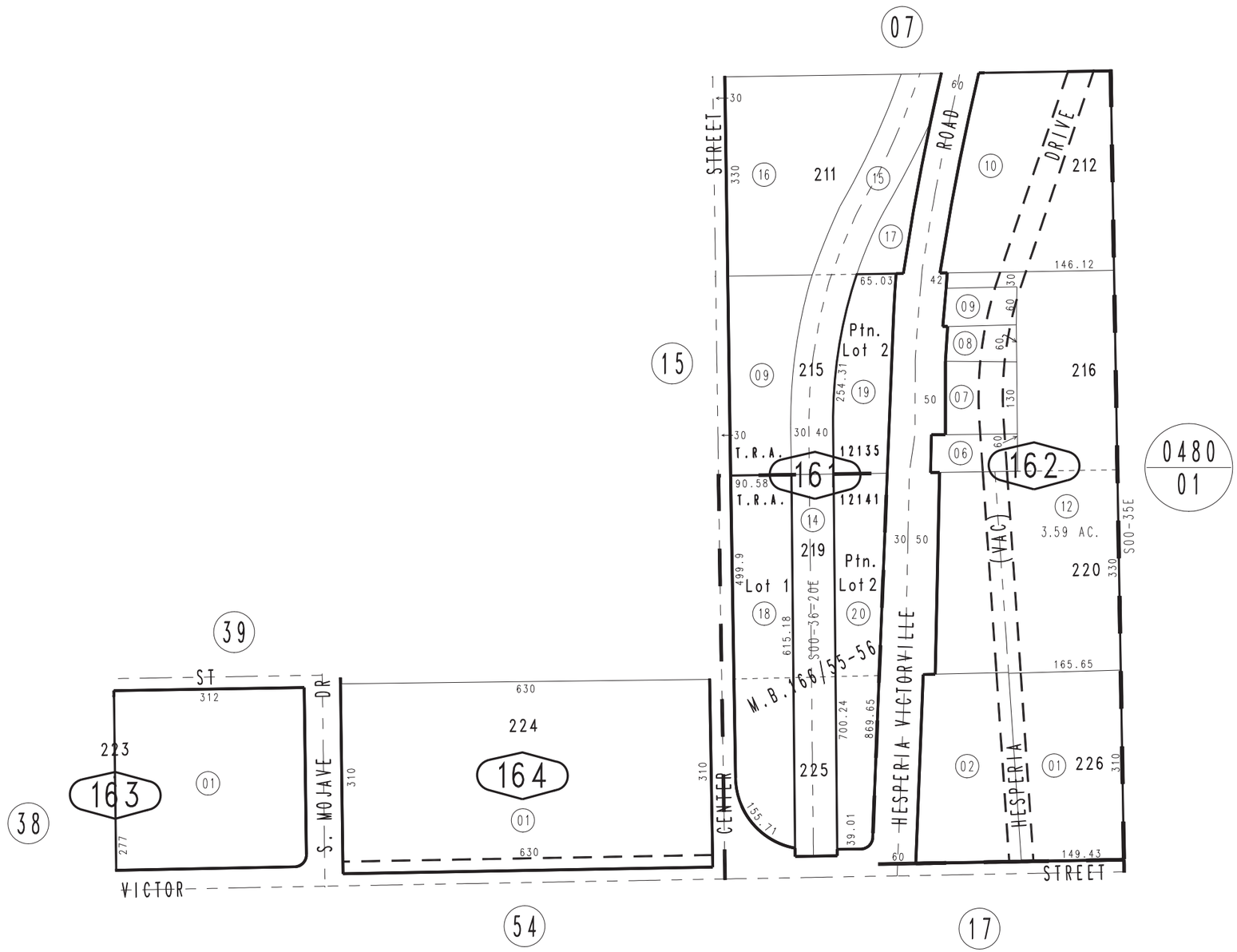

REVISED
07/02/09 LH
09/24/09 RU
02/10/10 KA
06/15/10 GW

June 2004

Tract No. 12226, M.B. 166/55-56

Ptn. N.E. 1/4, Sec. 16
T.5N., R.4W.

Assessor's Map
Book 0477 Page 16
San Bernardino County