THIS MAP IS FOR THE PURPOSE OF AD VALOREM TAXATION ONLY.

S.1/2 Fractional Sec.22, T.3N.,R.4E., S.B.B.&M.

Lucerne Valley Union 0454- 75
Tax Rate Area
88031

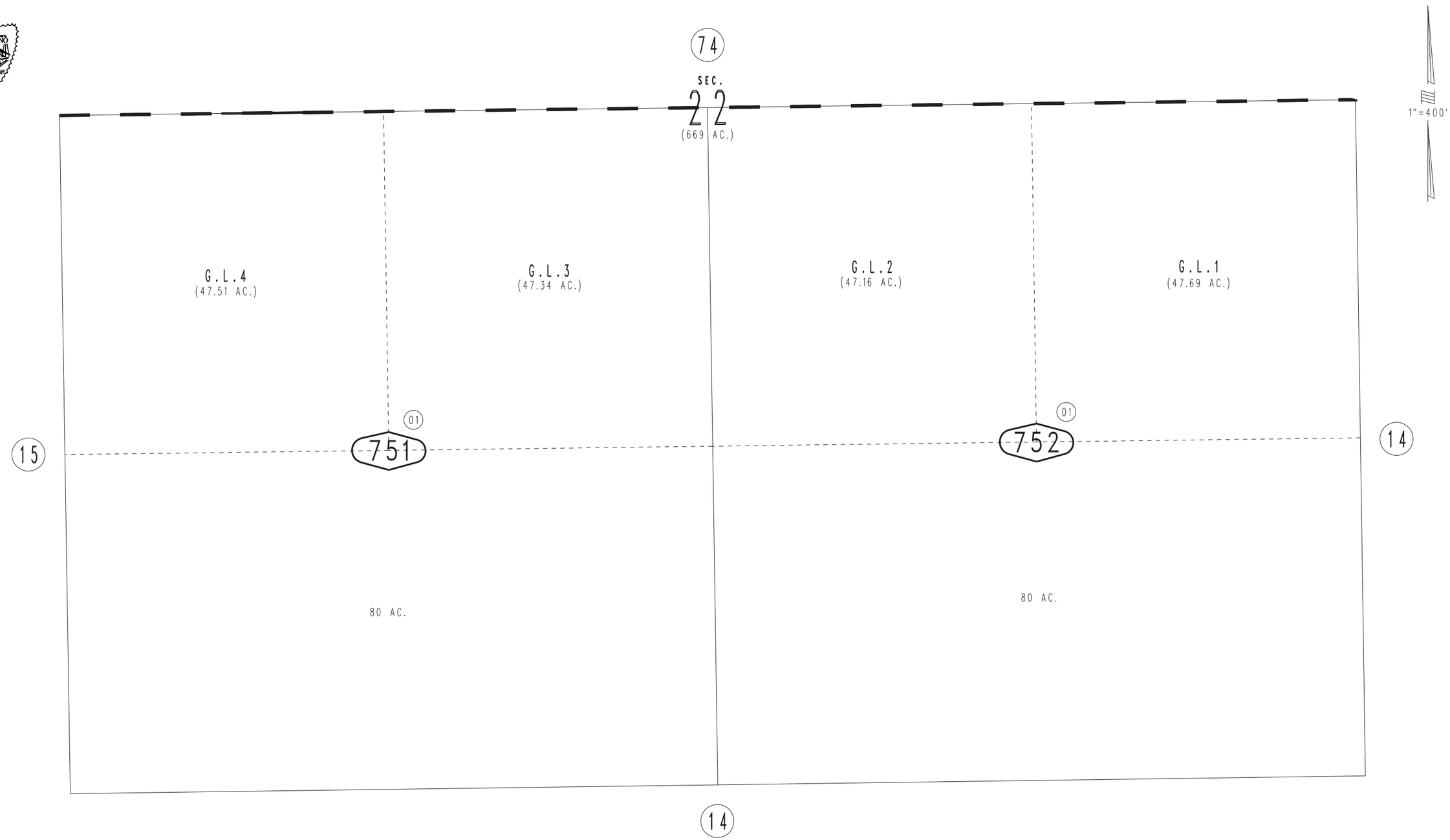

REVISED

Assessor's Map
Book 0454 Page 75
San Bernardino County

May 2005