THIS MAP IS FOR THE PURPOSE OF AD VALOREM TAXATION ONLY.

S.1/2 Fractional Sec.5, T.3N.,R.3W., S.B.B.&M.

Apple Valley
Tax Rate Area
54006

0433- 21

1"=400'

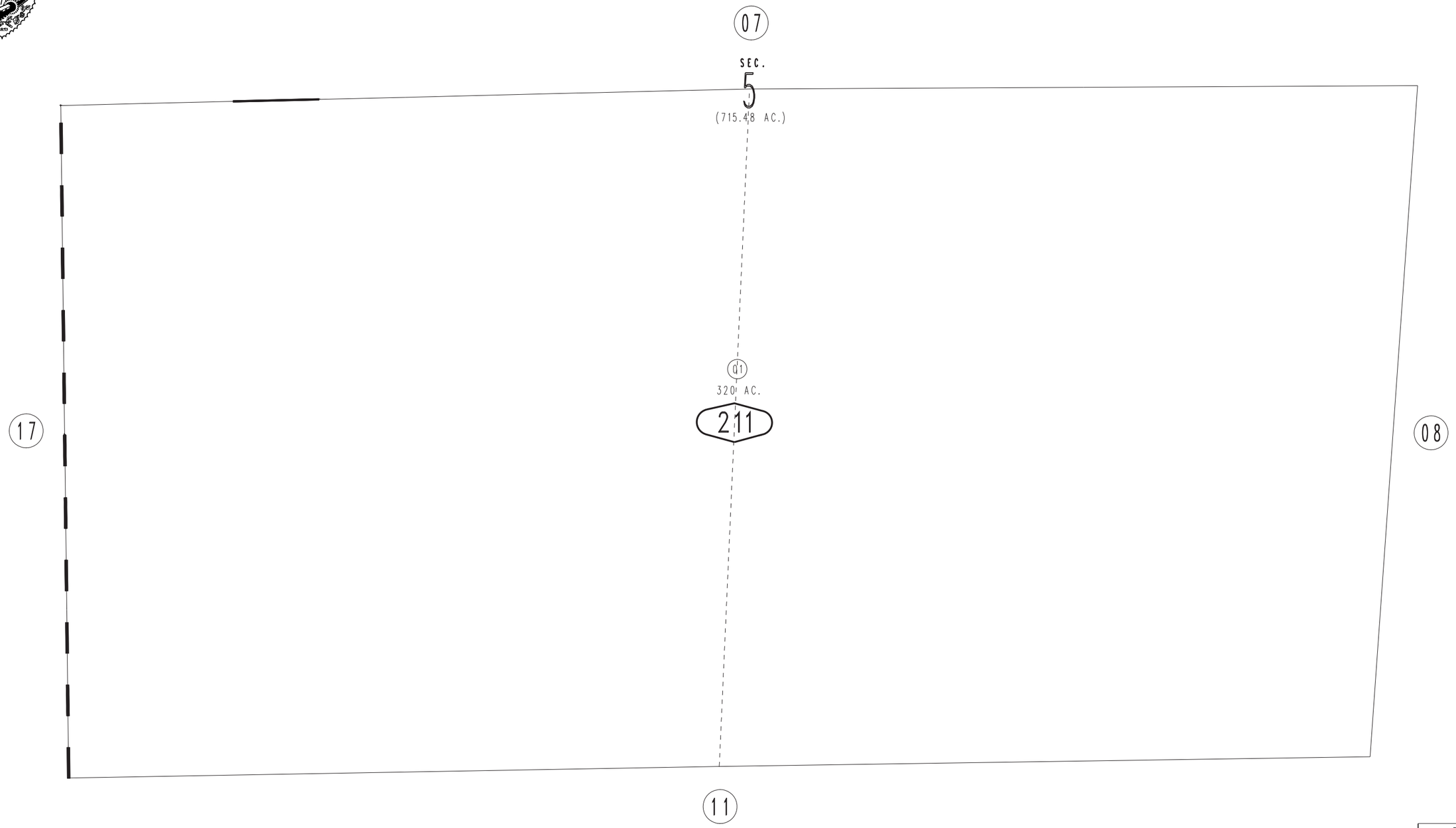

REVISED

Assessor's Map
Book 0433 Page 21
San Bernardino County

December 2004