THIS MAP IS FOR THE PURPOSE OF AD VALOREM TAXATION ONLY.

Fractional Sec.26 & Fractional Sec.25, T.4N.,R.3W., S.B.B.&M.

Apple Valley
Tax Rate Area
54012

0433- 03

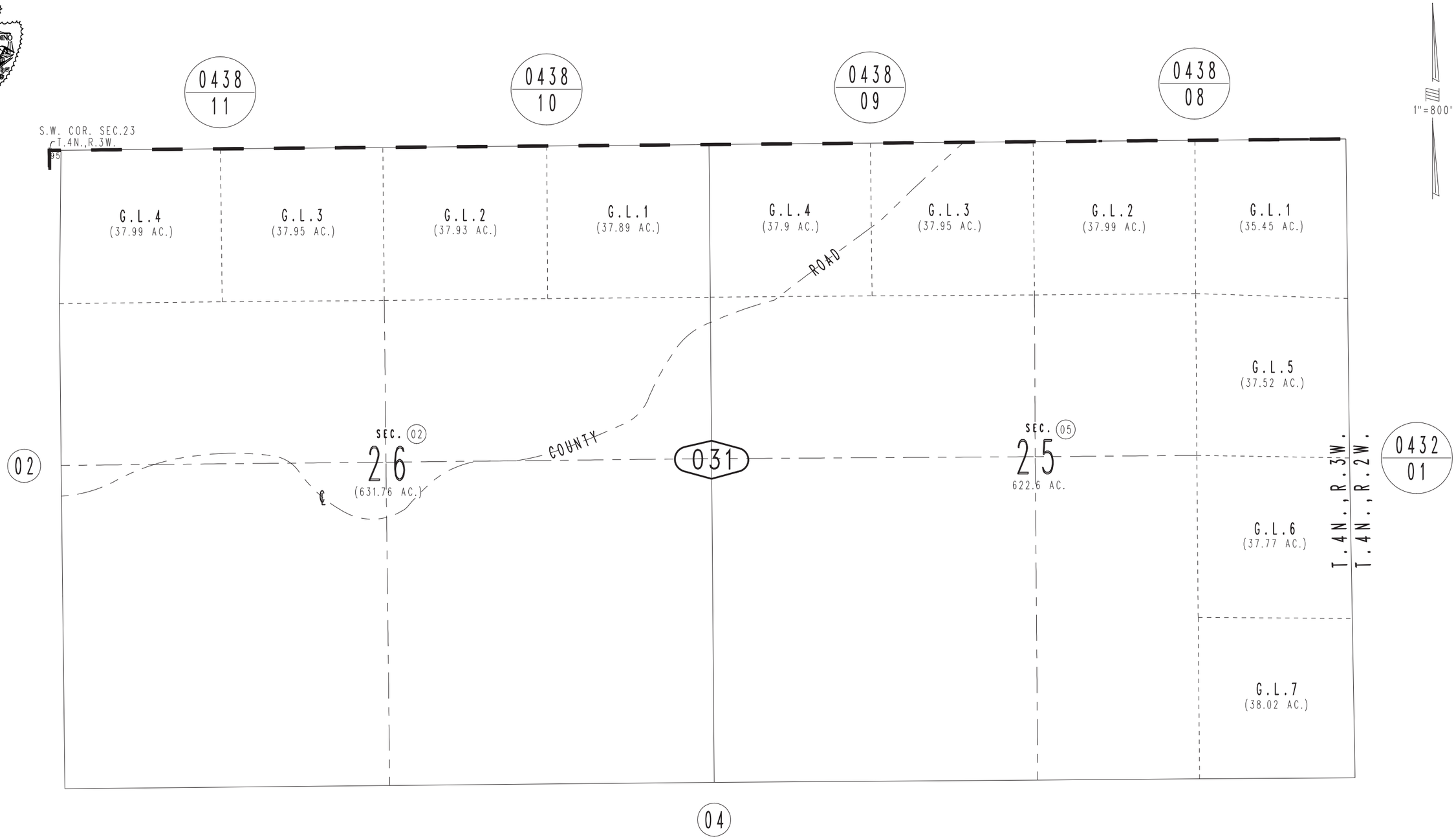

REVISED

Assessor's Map
Book 0433 Page 03
San Bernardino County

December 2004