THIS MAP IS FOR THE PURPOSE OF AD VALOREM TAXATION ONLY.

Sec.23 & Fractional Sec.24, T.3N.,R.2W., S.B.B.&M.

Apple Valley
Tax Rate Area
54155

0432- 15

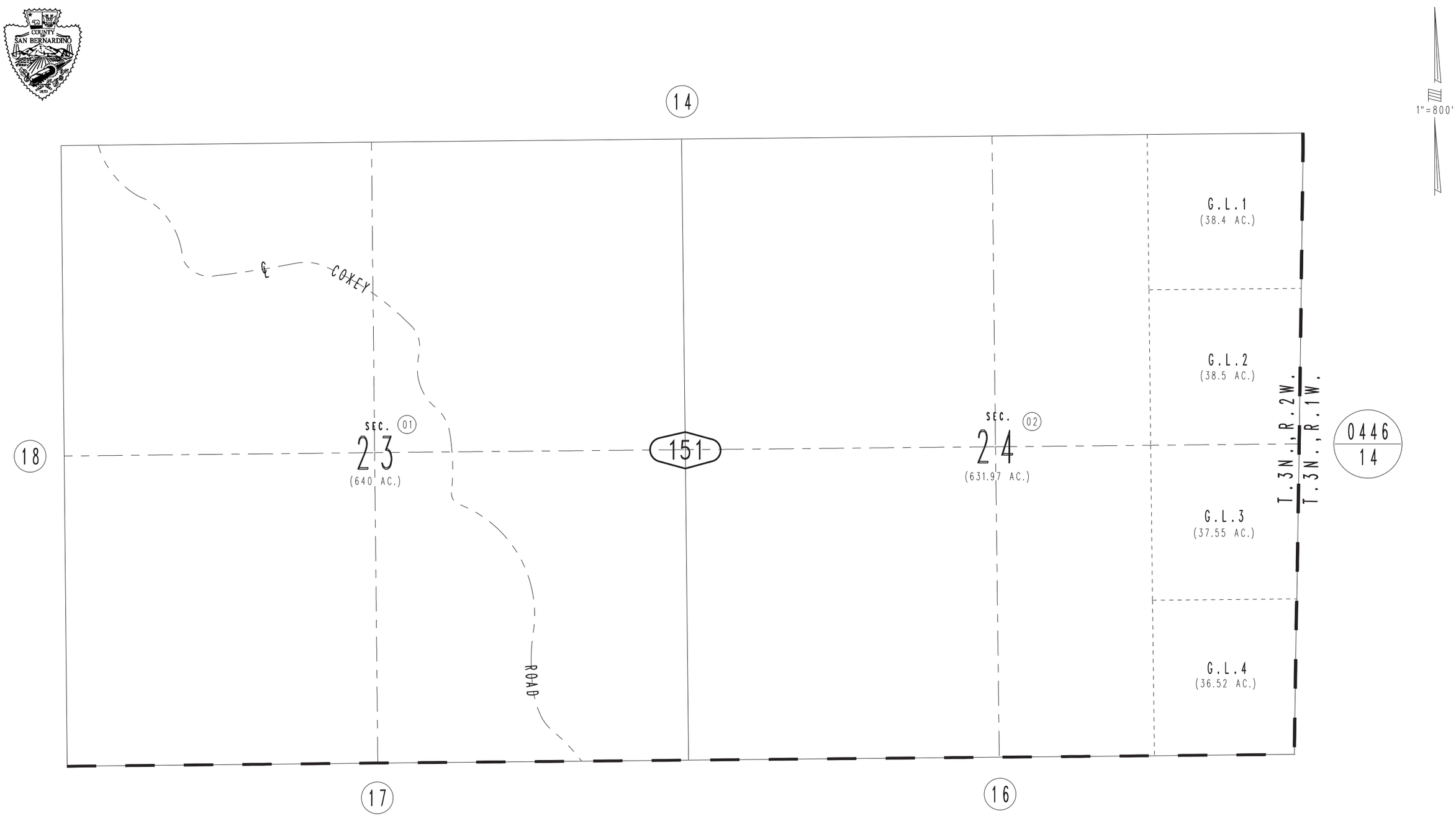

REVISED
11/13/12 BK-MC

Assessor's Map
Book 0432 Page 15
San Bernardino County

December 2004