THIS MAP IS FOR THE PURPOSE OF AD VALOREM TAXATION ONLY.

Sec.21&22, T.2N.,R.7W., S.B.B.&M.

Mount Baldy
Tax Rate Area
59001

0353- 12

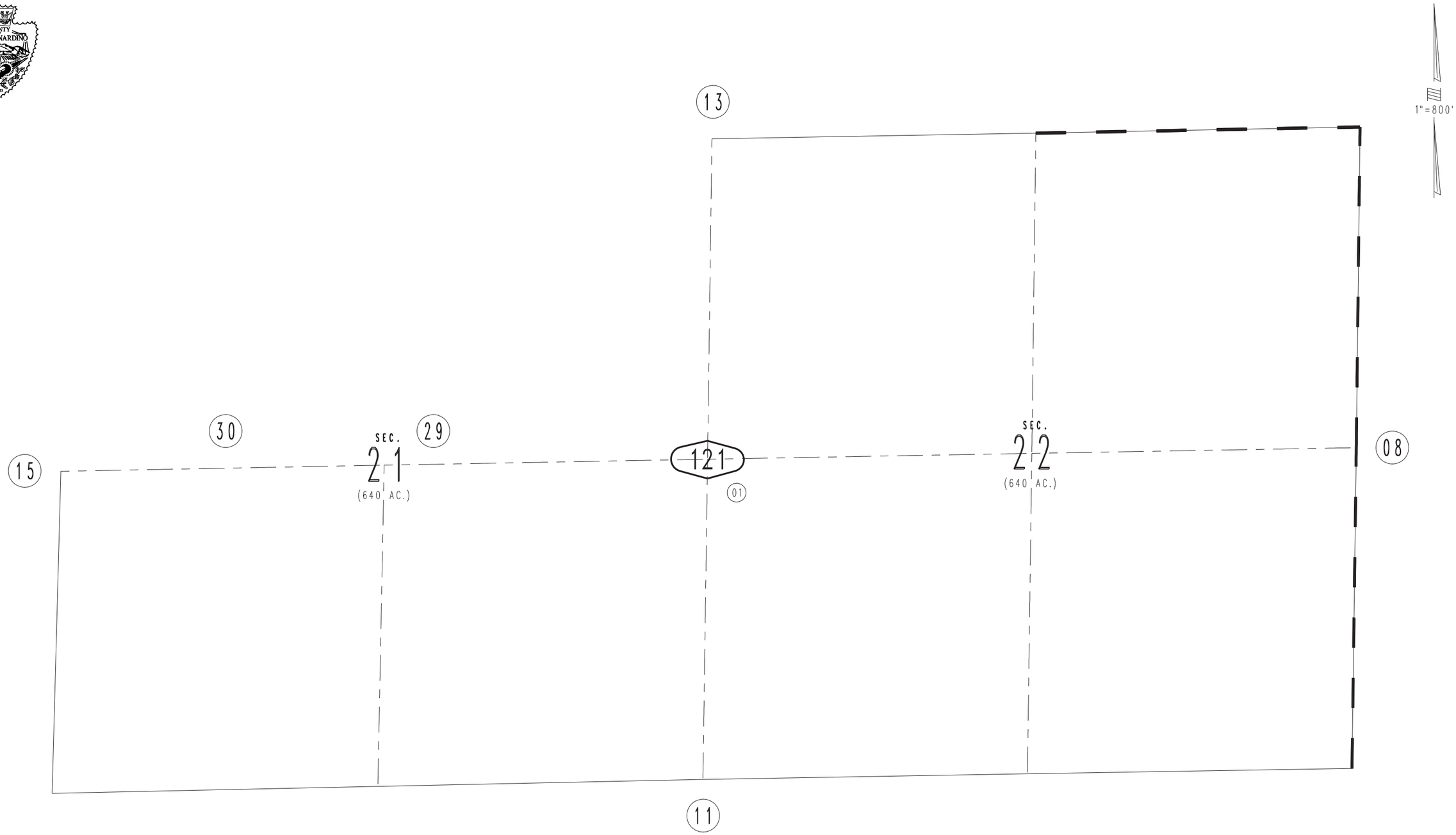

REVISED

Assessor's Map
Book 0353 Page 12
San Bernardino County

February 2005