THIS MAP IS FOR THE PURPOSE OF AD VALOREM TAXATION ONLY.

N.1/2 Sec.9, T.2N.,R.3W., S.B.B.&M.

Rim of The World Unified
Tax Rate Area
105034

0345- 16

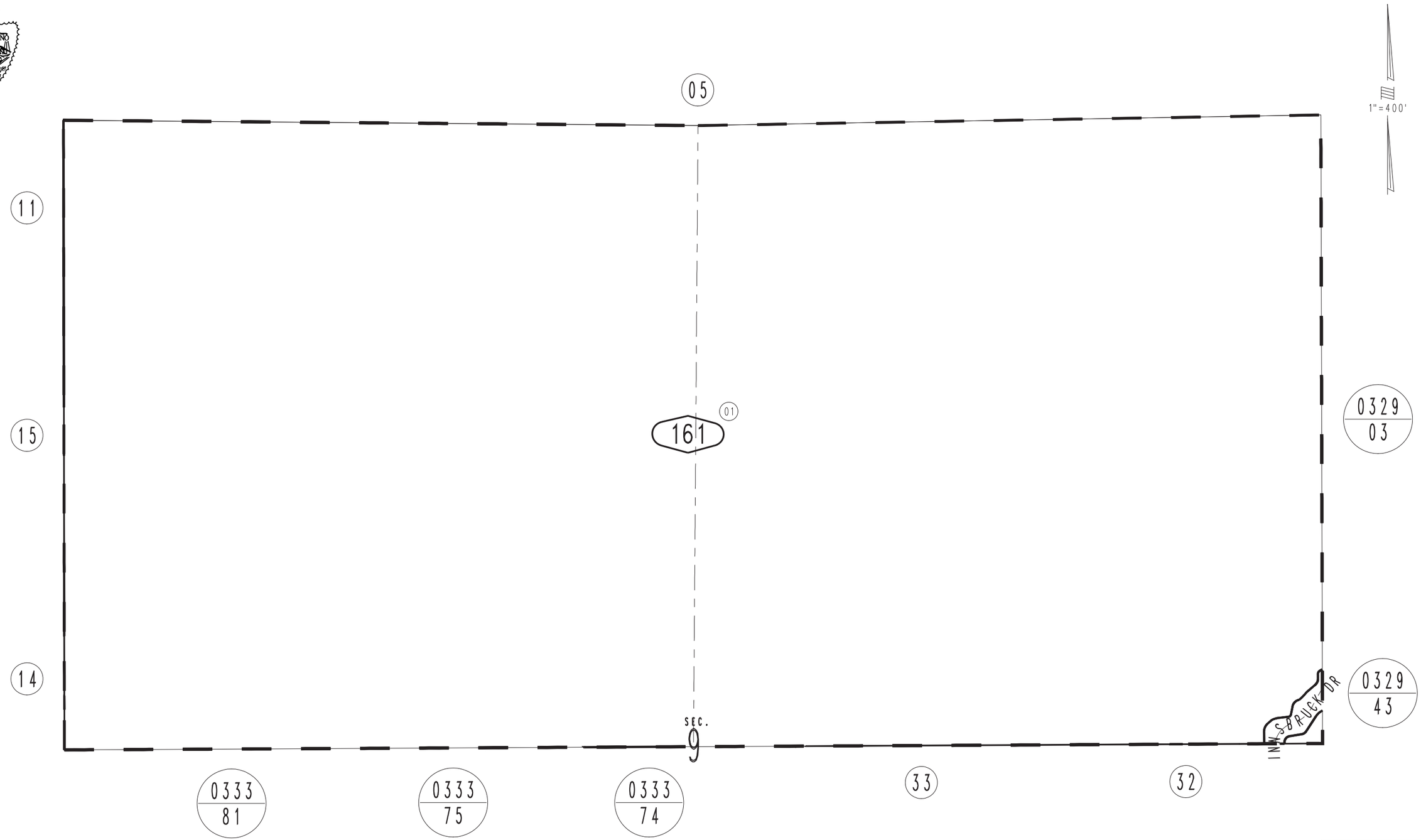

REVISED
04/23/09 KA

Assessor's Map
Book 0345 Page 16
San Bernardino County

April 2005