THIS MAP IS FOR THE PURPOSE OF AD VALOREM TAXATION ONLY.

S.1/2 Sec.25, T.2N.,R.3W., S.B.B.&M.

Rim of The World Unified 0332- 24
Tax Rate Area
105034

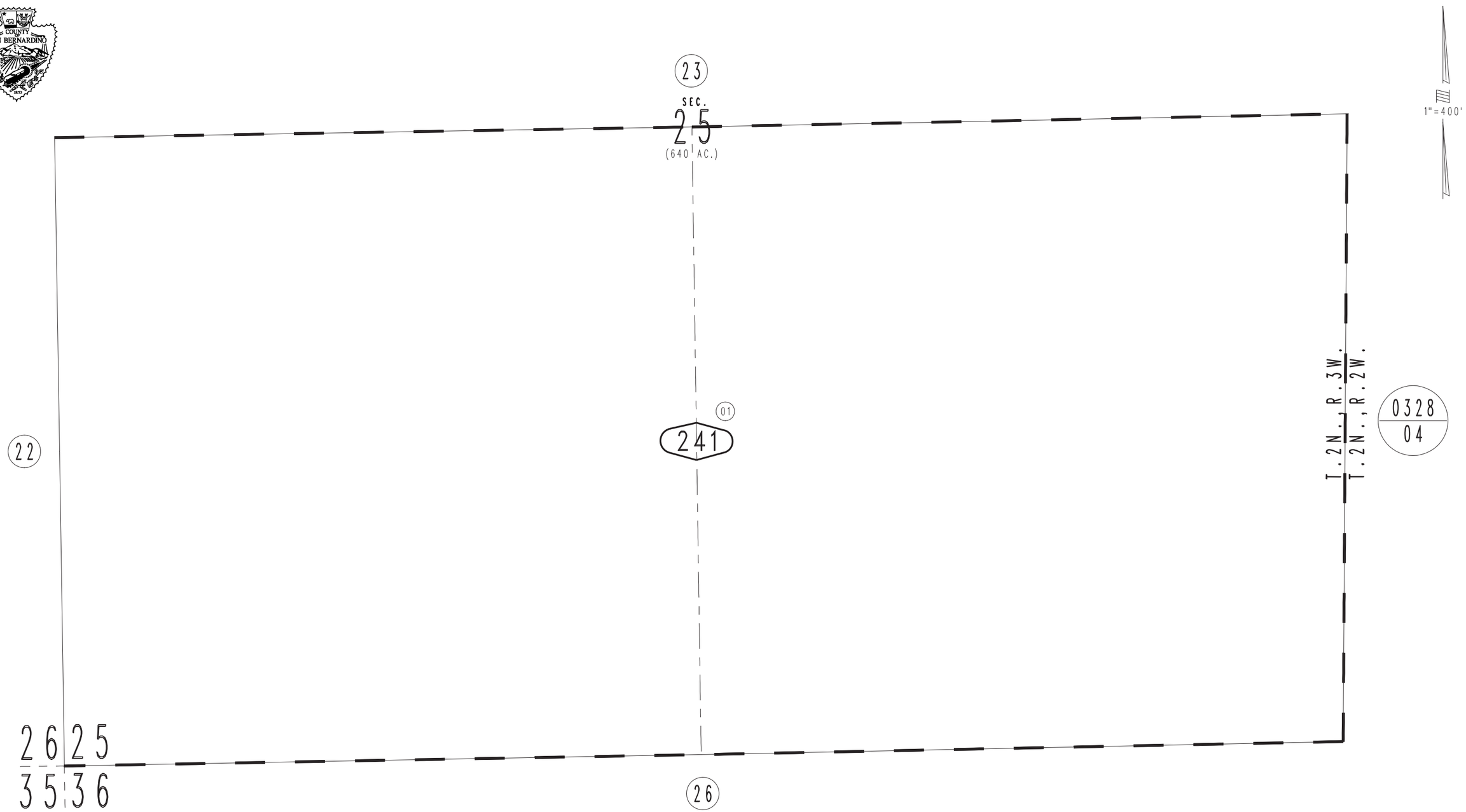

REVISED

Assessor's Map
Book 0332 Page 24
San Bernardino County

March 2005