THIS MAP IS FOR THE PURPOSE OF AD VALOREM TAXATION ONLY.

S.1/2 Sec.35, T.2N.,R.2W., S.B.B.&M.

Rim of The World Unified
Tax Rate Area
105000

0327- 22

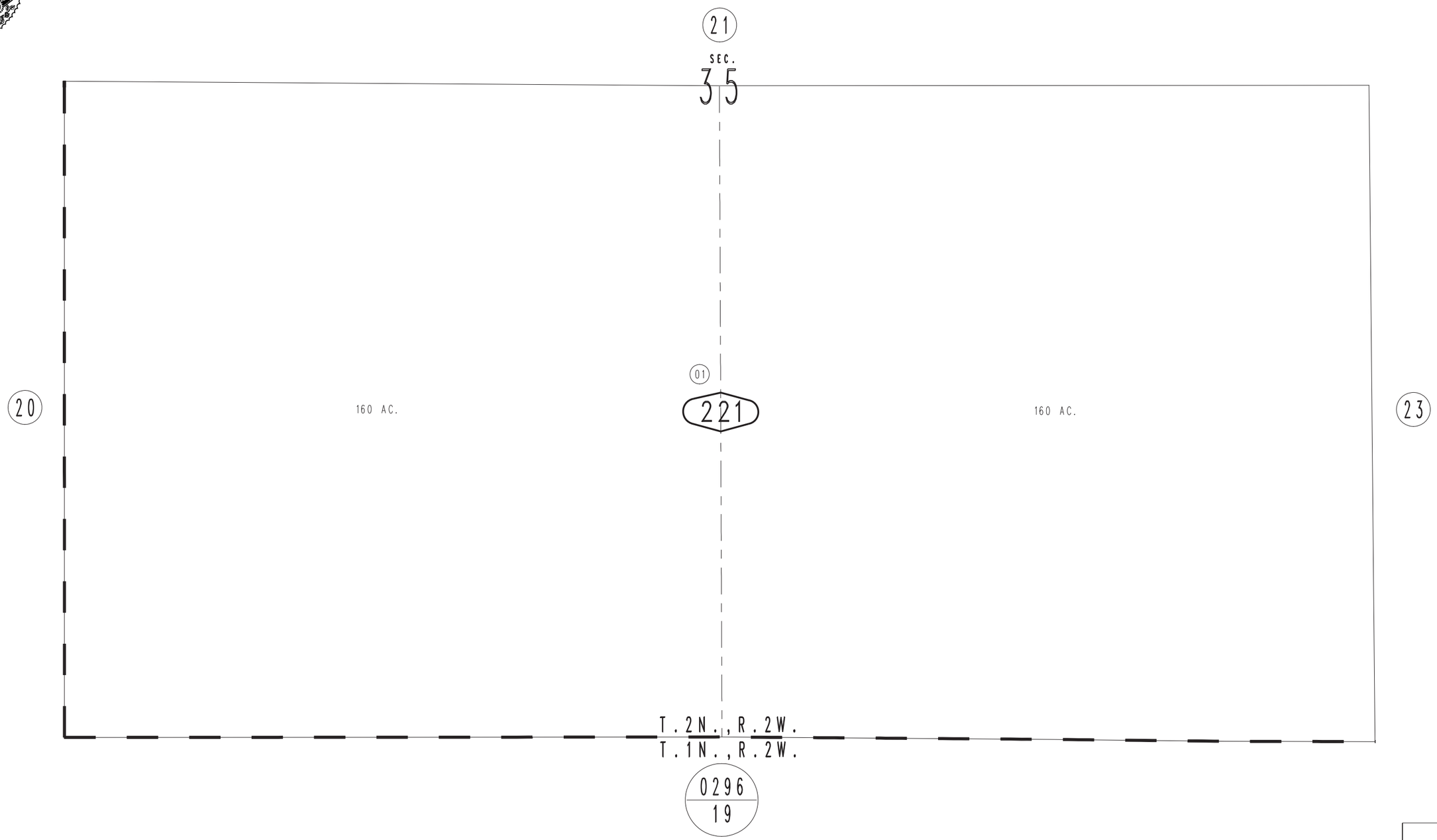

REVISED
03/25/09 KA

Assessor's Map
Book 0327 Page 22
San Bernardino County

April 2005