THIS MAP IS FOR THE PURPOSE OF AD VALOREM TAXATION ONLY.

Sec.29&30, T.1S.,R.1E., S.B.B.&M.

Redlands Unified
Tax Rate Area
104094 104095

0324- 27

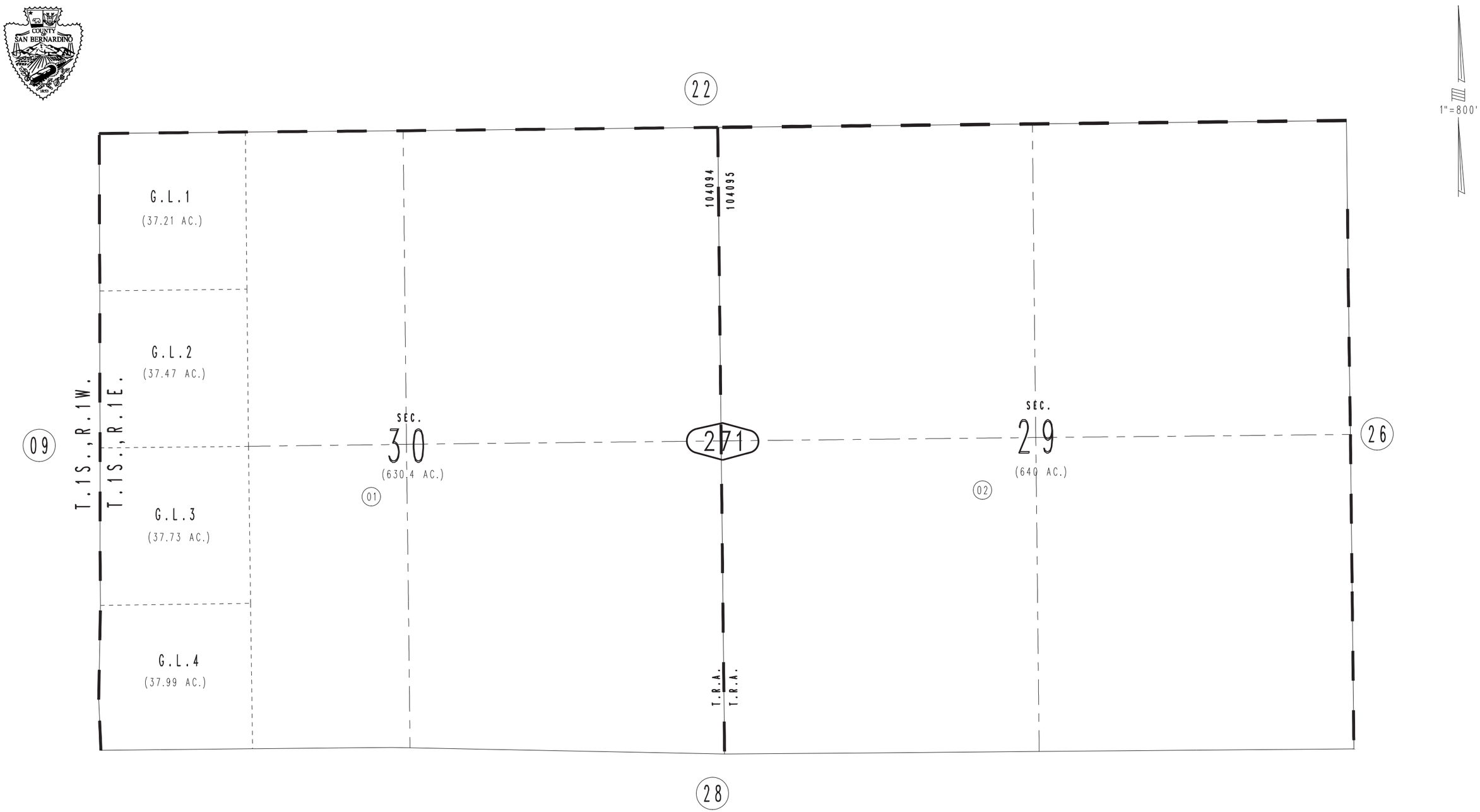

REVISED
09/09/11 GW-MC

Assessor's Map
Book 0324 Page 27
San Bernardino County

March 2005