THIS MAP IS FOR THE PURPOSE OF AD VALOREM TAXATION ONLY.

N.1/2 Sec.11, T.1S., R.1W., S.B.B.&M.

Yucaipa Joint Unified
Tax Rate Area
118008

0323- 07

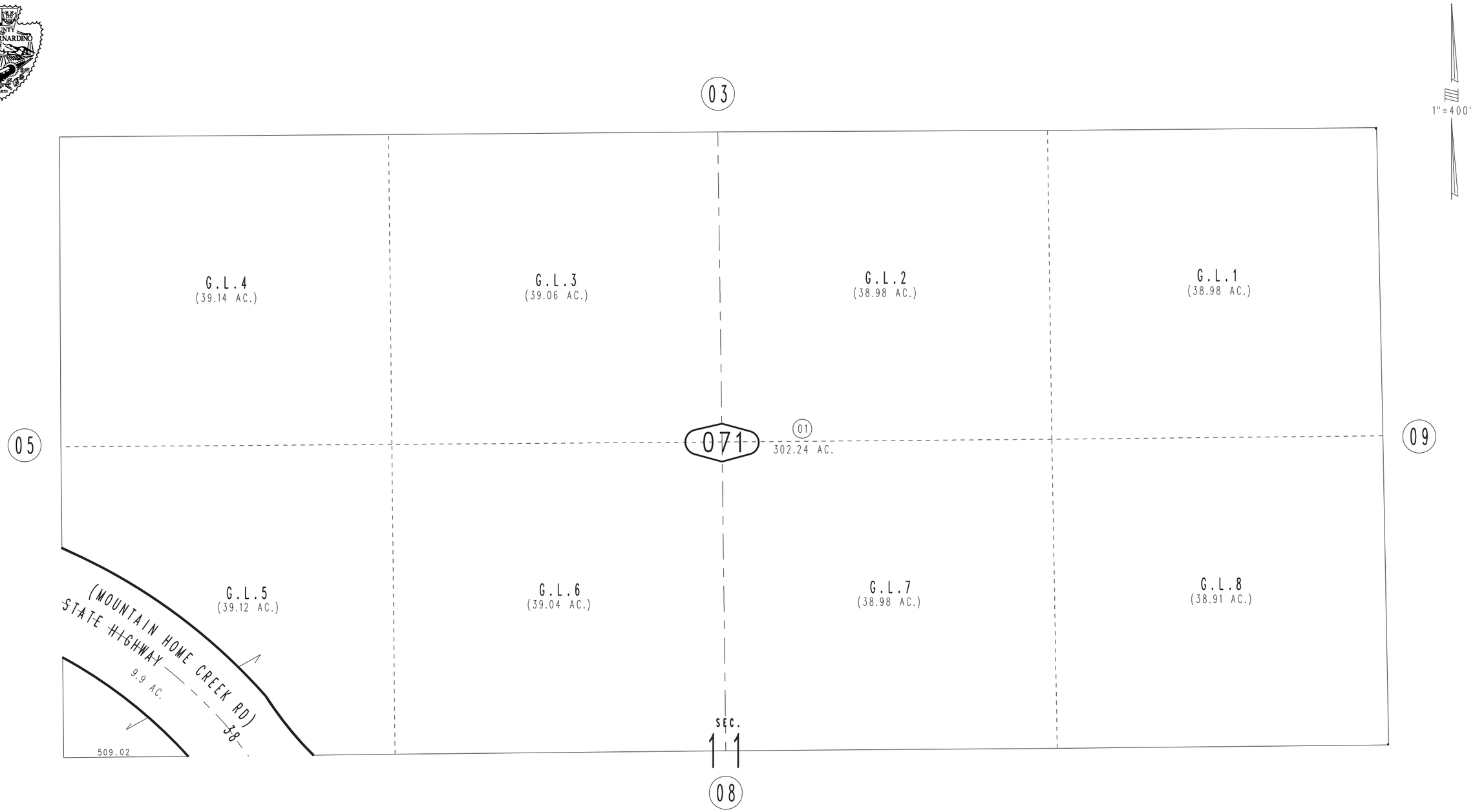

REVISED
04/29/16 BK-MC

Assessor's Map
Book 0323 Page 07
San Bernardino County

May 2005