THIS MAP IS FOR THE PURPOSE OF AD VALOREM TAXATION ONLY.

Ptn. S.W.1/4 Sec.32, T.1S.,R.1W., S.B.B.&M.

City of Yucaipa
Tax Rate Area
22003

0321 - 23

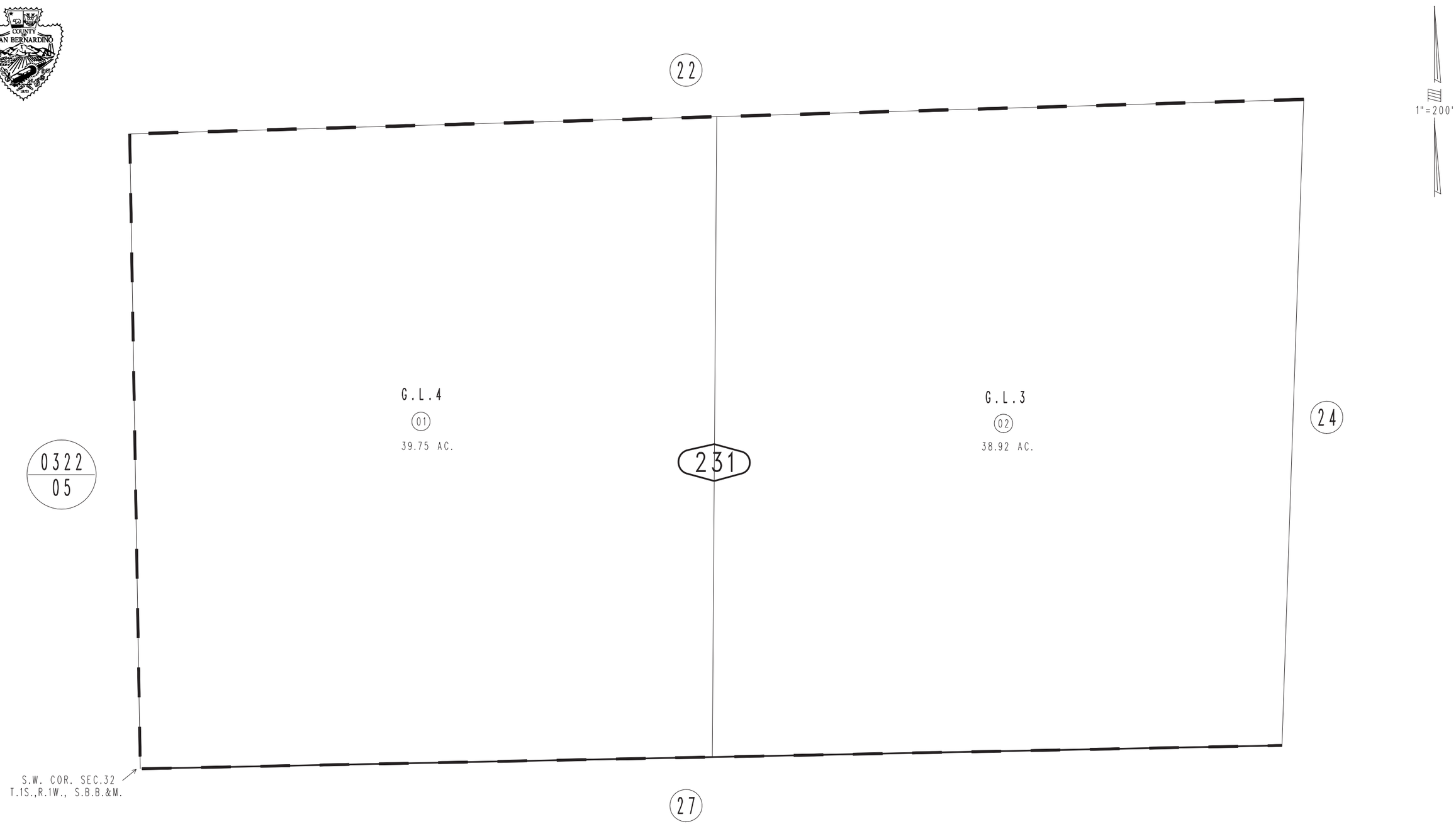

REVISED

Assessor's Map
Book 0321 Page 23
San Bernardino County

January 2005