THIS MAP IS FOR THE PURPOSE OF AD VALOREM TAXATION ONLY.

Tract No. 15758, M.B. 272/68-70

City of Yucaipa
Tax Rate Area
22002

0318 - 55

1" = 100'

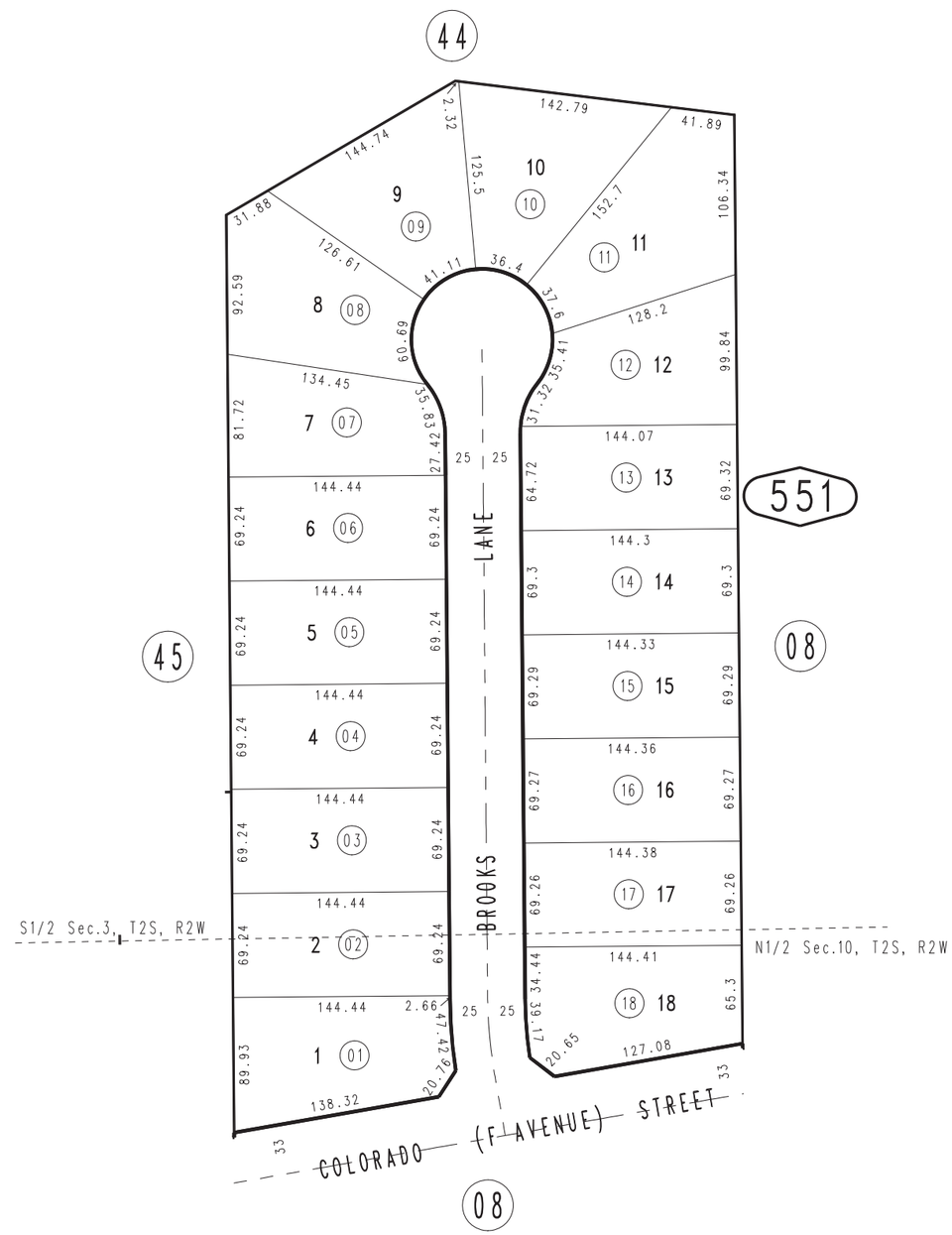

February 2005

Ptn. S.1/2 Sec.3 & N.1/2 Sec. 10
T.2S. R.2W.

Assessor's Map
Book 0318 Page 55
San Bernardino County

REVISED
03/13/12 GW