THIS MAP IS FOR THE PURPOSE OF AD VALOREM TAXATION ONLY.

Ptn. Tract No. 16036, M.B. 292/67-72

Bear Valley Unified
Tax Rate Area
57004

0315 - 51

1"=200'

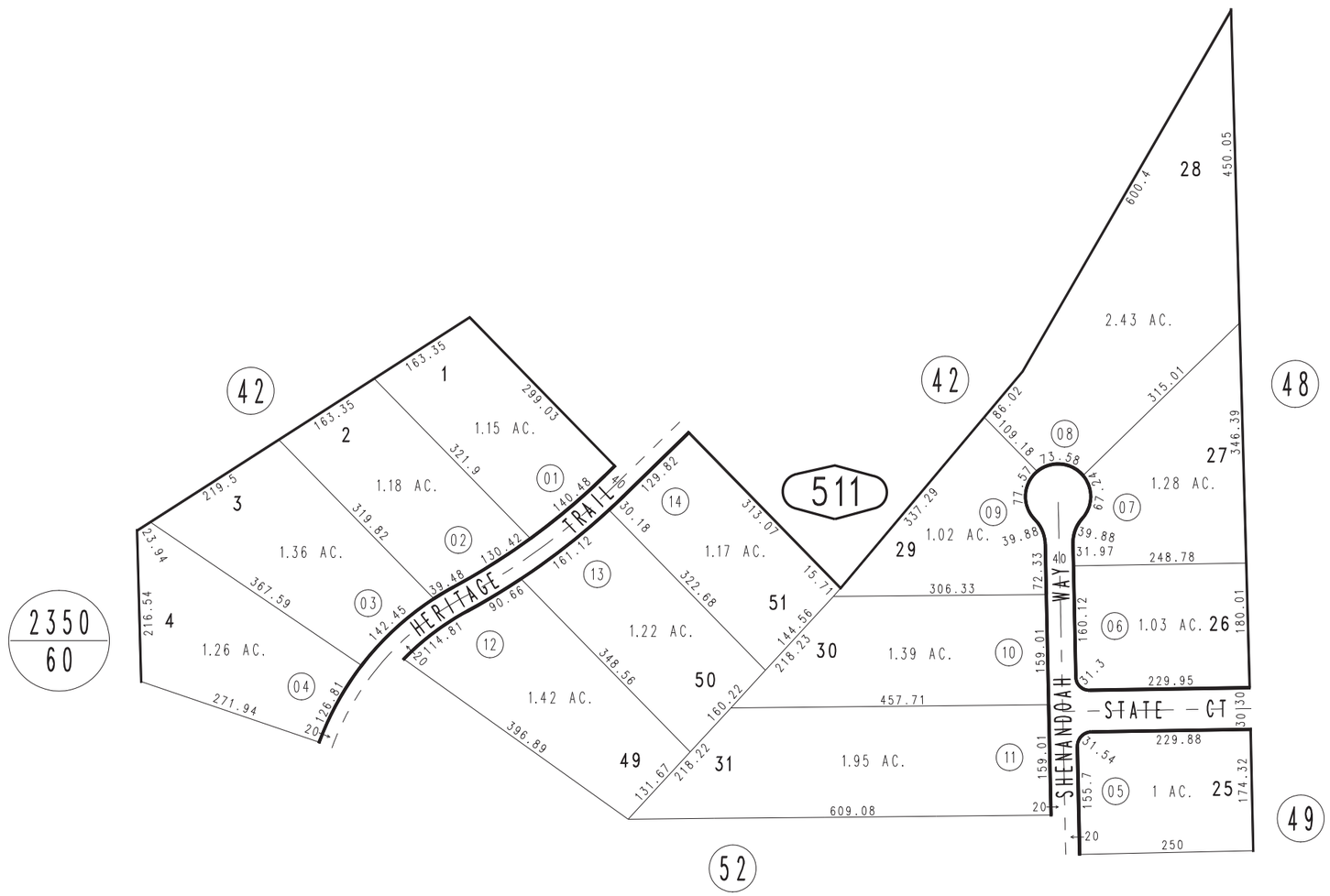

November 2004

Ptn. W.1/2, Sec.19,
T.2N.,R.2E.

Assessor's Map
Book 0315 Page 51
San Bernardino County

REVISED